VILNIUS GEDIMINAS TECHNICAL UNIVERSITY
FACULTY OF ELECTRONICS
DEPARTMENT OF ELECTRICAL ENGINEERING

Šarūnas Lukoševičius

ANALYSIS OF HIGH VOLTAGE SQUARE PULSE GENERATOR FOR APPLICATIONS IN BIOTECHNOLOGIES
AUKŠTOS ĮTAMPOS STAČIAKAMPIŲ IMPULSŲ GENERATORIAUS, TAIKOMO BIOTECHNOLOGIJOSE, TYRIMAS

Master Thesis

Electrical energetics systems engineering study programme, state code 621H62002
Modern electrical power engineering specialization
Electronic and electrical engineering study field

Vilnius, 2015

VILNIUS GEDIMINAS TECHNICAL UNIVERSITY
FACULTY OF ELECTRONICS
DEPARTMENT OF ELECTRICAL ENGINEERING

CONFIRMED
Head of department

_____
(Signature)
Prof. PhD. Vygaudas Kvedaras
(Full name)

_____
(Date)

Šarūnas Lukoševičius

ANALYSIS OF HIGH VOLTAGE SQUARE PULSE GENERATOR FOR APPLICATIONS IN BIOTECHNOLOGIES
AUKŠTOS ĮTAMPOS STAČIAKAMPIŲ IMPULSŲ GENERATORIAUS, TAIKOMO BIOTECHNOLOGIJOSE, TYRIMAS

Master Thesis

Electrical energetics systems engineering study programme, state code 621H62002
Modern electrical power engineering specialization
Electronic and electrical engineering study field

Academic supervisor	Prof. PhD Voitech Stankevič	_____	_____
	(Scientific/pedag. degree, full name)	(Signature)	(Date)
Consultant	_____	_____	_____
	(Scientific/pedag. degree, full name)	(Signature)	(Date)
Consultant	_____	_____	_____
	(Scientific/pedag. degree, full name)	(Signature)	(Date)

Vilnius, 2015

VILNIAUS GEDIMINO TECHNIKOS UNIVERSITETAS
ELEKTRONIKOS FAKULTETAS
ELEKTROTECHNIKOS KATEDRA

TVIRTINU
Katedros vedėjas

_____
(Parašas)
prof. dr. Vygaudas Kvedaras
(Vardas, pavardė)
_____
(Data)

Elektronikos ir elektros inžinerijos studijų kryptis

Elektros energetikos sistemų inžinerijos studijų programa, valstybinis kodas 621H62002

Moderniosios elektros energetikos inžinerijos specializacija

BAIGIAMOJO MAGISTRO DARBO UŽDUOTIS

…….....Nr. .....
Vilnius

Studentui (ei) .....Šarūnui Lukoševičiui.....…..….....
(Vardas, pavardė)

Baigiamojo darbo tema: **Analysis of high voltage square pulse generator for applications in biotechnologies** .....

patvirtinta 2013 m. spalio 30 d. dekano potvarkiu Nr. 395el

Baigiamojo darbo užbaigimo terminas 2015 m. birželio 11 d.

BAIGIAMOJO DARBO UŽDUOTIS:

Išnagrinėti aukštos įtampos impulsų generavimo metodus, raktus, naudojamus impulsų generavimui. Įvertinti generatoriaus impulsų trukmes remiantis kondensatorių talpomis bei impulsų terminiu poveikiu mėginiams. Sukurti aukštos įtampos impulsų generatoriaus modelį bei ištirti impulsų formos priklausomybė nuo grandinės parametrų. Išmatuoti elektroporatoriaus prototipo generuojamus impulsus ir juos palyginti su modeliavimo rezultatais.....

.....

Baigiamojo darbo rengimo konsultantai:

……

.....

.....

(Moksl. laipsnis/pedag. vardas, vardas, pavardė)

Vadovas ....Prof. PhD. Voitech Stankevič.....
(Parašas) (Moksl. laipsnis/pedag.vardas, vardas, pavardė)

Užduotį gavau

……..
(Parašas)
…...Šarūnas Lukoševičius…....
(Vardas, pavardė)
……..…....
(Data)

Vilnius Gediminas Technical University
Faculty of **Electronics**
Department of **Electrical engineering**

ISBN ISSN
Copies No. ……
Date ….-….-….

Electrical energetics systems engineering study programme master thesis.

Title: **Analysis of high voltage square pulse generator for applications in biotechnologies**

Author **Šarūnas Lukoševičius** Academic supervisor **Prof. PhD Voitech Stankevič**

Thesis language

[ ] Lithuanian
[X] Foreign (English)

Abstract

High voltage pulse generator for applications in cell electroporation research is analyzed in this master thesis paper. Electroporation research is important in a number of applications in medical treatment. The aim of the work is to suggest the optimal scheme of electroporator, to choose corresponding elements and to examine the parameters of constructed electroporator prototype. Effect of electroporation and types of electroporation pulse generators are reviewed in the first part of the work. Commercially available electroporators are also reviewed. Calculations of the main parameters of pulse generator are made in the second part of this work. Digital models of real Insulated gate bipolar transistor (IGBT) and pulse generator were made. Influence of various circuit parameters on the pulse shape was analyzed using these digital models. Method of square pulse turn-off time improvement was suggested. Measurements of the prototype generator parameters were conducted in the last part of the work. Measured pulses were analyzed and compared with modeled ones.

Structure: introduction, literature review, designing of pulse generator, analysis of constructed generator, conclusions and suggestions, references.

Thesis consists of 50 p. of text without appendixes, 31 figure, 10 tables, 25 bibliographical entries.

Appendixes included.

Keywords: high voltage pulse generator, electroporator, capacitor discharge pulse generator, IGBT switches, modeling of pulse generator

Vilniaus Gedimino technikos universitetas
Elektronikos fakultetas
Elektrotechnikos katedra

ISBN ISSN
Egz. sk. ……..
Data ….-….-….

Elektros energetikos sitemų inžinerijos studijų programos baigiamasis magistro darbas

Pavadinimas **Aukštos įtampos stačiakampių impulsų generatoriaus, taikomo biotecnologijose, tyrimas**

Autorius **Šarūnas Lukoševičius** Vadovas prof. dr. **Voitech Stankevič**

Kalba

[ ] lietuvių

[X] užsienio (anglų)

Anotacija

Šio baigiamojo magistro darbo tikslas yra ištirti aukštos įtampos stačiakampių impulsų generatorių, taikomą ląstelių elektroporacijos moksliniams tyrimams, kurie svarbūs įvairiems medicininio gydymo taikymams. Darbo uždavinys yra pasiūlyti optimalią elektroporatoriaus schemą, parinkti atitinkamus elementus ir ištirti elektroporatoriaus prototipo parametrus. Darbo pirmoje dalyje apžvelgiamas elektroporacijos reiškinys ir elektrinių impulsų generatorių tipai, naudojami šiam tikslui. Taip pat atlikta rinkoje esančių elektroporatorių apžvalga. Antroje darbo dalyje atlikti svarbiausių generatoriaus parametrų skaičiavimai. Sukurti impulsų generatoriaus bei realaus izoliuotos užtūros dvipolio tranzistoriaus (IGBT) skaitmeniniai modeliai. Nauodjant šiuos modelius analizuojama įvairių grandinės parametrų įtaką impulso formai. Pasiūlytas stačiakampio impulso galinio fronto trukmės sumažinimo būdas. Paskutinėje darbo dalyje atlikti generatoriaus prototipo parametrų matavimai. Impulsai išanalizuoti ir palyginti su skaitmeninio modeliavimo rezultatais.

Darbą sudaro įvadas, literatūros apžvalga, impulsų generatoriaus projektavimas, sukonstruoto generatoriaus tyrimas, pabaigoje pateikiamos išvados, literatūros sąrašas.

Darbo apimtis - 50 p. be priedų, 31 iliustracija, 10 lentelių, 25 bibliografinių įrašų.

Priedai pateikiami atskirai.

Prasminiai žodžiai: aukštos įtampos impulsų generatorius, elektroporatorius, kondensatoriaus iškrovos impulsų generatorius, IGBT jungikliai, impulsų generatoriaus modeliavimas

(the document of Declaration of Authorship in the Final Degree Project)

VILNIUS GEDIMINAS TECHNICAL UNIVERSITY

Šarūnas Lukoševičius, 20131164

(Student‘s given name, family name, certificate number)

Faculty of electronics

(Faculty)

Electrical energetics systems engineering, EEIfmu-13

(Study programme, academic group no.)

DECLARATION OF AUTHORSHIP
IN THE FINAL DEGREE PROJECT

2015-05-28

(Date)

I declare that my Final Degree Project entitled **Analysis of high voltage square pulse generator for applications in biotechnologies** is entirely my own work. The title was confirmed on 2015-04-16 (Date) by Faculty Dean’s order No. 70 el. I have clearly signalled the presence of quoted or paraphrased material and referenced all sources.

I have acknowledged appropriately any assistance I have received by the following professionals/advisers: _____

The academic supervisor of my Final Degree Project is prof. PhD Voitech Stankevič.

No contribution of any other person was obtained, nor did I buy my Final Degree Project.

_____ (Signature)

ŠARŪNAS LUKOŠEVIČIUS (Given name, family name)

CONTENTS

INTRODUCTION 11
1. LITERATURE REVIEW 12
1.1. Introduction of electroporation 12
1.2. Methods of electroporation pulse generation 13
1.3. Pulse generator switches 17
1.4. Review of commercially available electroporators 22
2. DESIGNING OF PULSE GENERATOR 25
2.1. Required characteristics of electroporators 25
2.2. Determination of pulse length ranges of generator 26
2.3. Simulation of generator pulse 31
2.4. Methods of pulse shape improvement 37
3. ANALYSIS OF CONSTRUCTED GENERATOR 40
3.1. Methods of pulse measurement 40
3.2. Measurement and analysis of generator pulses 42
CONCLUSIONS 47
REFERENCES 48
APPENDIXES 51

LIST OF FIGURES

Figure 1. Capacitor discharge pulse generator circuit 14
Figure 2. Square wave generator circuit 14
Figure 3. Analog pulse generator circuit 15
Figure 4. Blumlein generator circuit 16
Figure 5. Diode opening switch generator circuit 16
Figure 6. Five different areas of electroporation pulse generation and corresponding switching methods used 18
Figure 7. N-channel IGBT cross section 19
Figure 8. IGBT equivalent circuit 20
Figure 9. On-state voltage drop dependence on the temperature of two semiconductor devices operated at the same current density 20
Figure 10. On-state voltage drop dependence on the voltage rating of the two types of devices 21
Figure 11. Commercially available electroporators from BTX 22
Figure 12. Two pulses with the same time constant and different initial voltage 26
Figure 13. Capacitor connections used in pulse generator 27
Figure 14. Dependency between pulse voltage and maximum acceptable pulse duration regarding thermal effect on the sample 30
Figure 15. Circuit used for creating IXEL40N400 IGBT transistor model 32
Figure 16. Output pulse of modeled IXEL40N400 IGBT transistor 32
Figure 17. Circuit used for high voltage pulse generator modeling 33
Figure 18. Pulsed voltage across the load when different capacitor capacitances are used 35
Figure 19. IGBT drain currents when different capacitor capacitances are used 35
Figure 20. a) IGBT drain current when capacitor is charged to 4 kV. b) Pulsed voltage across the load when capacitor is charged to different voltages 36
Figure 21. Pulsed voltage across the load with different line inductance of the generator 36
Figure 22. Pulsed voltage across the load with different load capacitance 37
Figure 23. a) Modeled pulse having IGBT turn-off tail; b) Measured generator's pulses and their turn-off tail's dependence on the load resistance 38
Figure 24. Circuit used for modeling high voltage pulse generator with bypass transistor 39
Figure 25. Modeling results of the generator with bypass IGBT transistor 39
Figure 26. Principle scheme of the circuit of high voltage pulse generator 40
Figure 27. Pulse shape on the measuring resistor having parasitic inductance 41
Figure 28. Scheme of the pulse measuring circuit at the output of the generator 42

Figure 29. Pulses of different length measured when capacitance was set to 250 μF. 44
Figure 30. Pulses measured to observe dependence of the capacitor discharge time constant on the pulse shape.....44
Figure 31. Pulses with different voltage of charged capacitor bank 45

LIST OF TABLES

Table 1. Pulse parameters for different electroporation applications.....13
Table 2. Advantages and disadvantages of different pulse generation methods.....17
Table 3. Summary of commercially available electroporators 23
Table 4. Information about capacitors used in pulse generator.....27
Table 5. Characteristics of different capacitor connections 28
Table 6. Characteristics of cuvettes and corresponding samples 29
Table 7. Maximum pulse lenghs according to restrictions on sample thermal damage.....30
Table 8. Main switching characteristics of the IXEL40N400 IGBT transistor 31
Table 9. Values of the components and other parametrs of the model 34
Table 10. Information of generator pulse measurements.....42

INTRODUCTION

One of the research fields in biotechnologies is cell electroporation (also called electropermeabilization). It is a phenomenon when changes in cell membrane occur due to effect of external electrical field. As a result of electroporation, permeability of cell membrane increases. Phenomenon is used mainly in medicine, biotechnology where molecules are introduced inside cells. High electrical fields are necessary in order to trigger electroporation of cell membrane. Hence, high voltage pulse generators are used in electroporation research. Analysis of high voltage square pulse generator for applications in biotechnologies is done in this work. Highly precise and well controlled parameters of pulse generators are needed for electroporation research. The problem here is to design a generator of wide range of pulse lengths. Ability to choose various pulse lengths is very important for electroporation research. However, it poses some difficulties which must be dealt with and that are covered in this work. The other problem is to generate a square wave pulses. Due to nature of the switching transistor and circuit elements, it is challenging to achieve desired near perfect square wave pulse shape. Difficulties obstructing generation of square pulses and ways of solving it are also covered in this work.

Object of the work is a high voltage pulse generation methods in electroporators.

The aim of the work is to choose the best suitable design and parameters of the generator circuit in order to generate square pulses as well as have wide range of pulse lengths.

In order to achieve the aim, the following targets are set:

- To make a literature review about the electroporation pulse generation methods and electroporators in the market.
- To analyze the semiconductor switches used for electroporation pulse generators.
- To determine a pulse length ranges of generator.
- To model pulses using created digital model of the generator circuit.
- Measure the pulses of constructed generator and compare with simulated ones.

The work is done by analyzing papers of international scientific community in the fields related to electroporation pulse generation and high voltage pulse generation. Comparative analysis is used as well. Digital modeling is performed for pulse predictions.

Master thesis consists of introduction, three main parts, including literature review of the pulse generation methods, available electroporators in the market and semiconductor switches. The second part deals with calculations of main parameters of pulse generation circuit, describes digital modeling. The third part is dedicated to the pulse measurements of constructed generator, their analysis. Conclusions are given at the end of the work.

1. LITERATURE REVIEW

1.1. Introduction of electroporation

Increased permeability of the cells due to electroporation allows for bigger molecules or ions to pass through the cell membrane in both directions: into and out of the cell. Size of originated pores is in the order of a few nanometers (Weaver J.C. and Chizmadzhev Y.A., 1996). Sufficient electrical field strength is needed for the cell to develop these pores (Neuman E. and Rosenhec K., 1972). It is believed that pores are formed then induced transmembrane voltage reaches larger value than some threshold. It is reported that this value is somewhat about 1 V (Kinosita K. and Tsong T.Y., 1977). However, other studies later showed it to be around 200 mV (Teissie J. and Rols M.P., 1993).

Permeabilization of membrane due to electroporation can be used and is used in various fields of medicine, biotechnology, water treatment. Ability to change physical structure of membrane using electrical fields is of great importance since no complicated physical intervention is needed. Actually, molecules of any size can be introduced into cell using electroporation. This is why phenomenon can be used in electrochemotherapy (Mir L.M. *et al*., 2006) and gene transfer (Neumann E. *et al.,* 1982, Mir L. M., 2009) where certain drugs and huge DNA or RNA molecules must be introduced into cells for cancer treatment and gene therapy. It can also be used for cell fusion (Zimmermann U., 1982), insertion of proteins into cell membrane (Mouneimne Y. *et al.*, 1989), water treatment and food preservation where microorganisms must be killed for safe use of water or food (Teissie J. *et al.,* 2002).

Efficiency of electroporation depends both on cell parameters (shape, size, temperature, cell surroundings) and electric field parameters. Since electric field is produced using high voltage impulses, electroporation is dependent on pulse amplitude, pulse duration, number of pulses, pulse shape, repetition frequency, electric field direction (Rebersek M. and Miklavcic D., 2010). Cell parameters are usually not controllable. Therefore good control over parameters of pulse is of main importance to efficient electroporation of cells. Electroporation can be reversible and irreversible. Usually cell's membrane returns to its normal state after electroporation. In this case reversible process is present. On the other hand, if membrane does not reseal, irreversible electroporation leads to death of the cell. Reversibility depends on the voltage of the pulse, where too high voltage pulses lead to irreversible changes in membrane. Resealing process takes a range of minutes while formation of pores happens in the time frame of microsecond (Gehl J., 2003).

Table 1. Pulse parameters for different electroporation applications

Application	Amplitude	Duration
Electrochemotherapy	~ 1 kV	1 µs
Gene electrotherapy	~ 1 kV	1 µs – 1 ms
Electroinsertion	< 1 kV	1 ms – 1 s
Transdermal drug delivery	< 1 kV	1 ms
Electrofusion	~ 1 kV	1 µs
Pasteurization	>> 1 kV	1 µs
Tissue ablation	> 1 kV	1 µs – 1 ms
Single cell electroporation	> 1 mV	1 µs
Electroporation research	1 mV – 1 kV	1 ns – 1 s

As mentioned before, electroporation is used in various fields. For different purposes different parameters of pulse are needed. Pulse voltages and durations necessary for different applications are shown in **table 1** (Rebersek M. and Miklavcic D., 2010). As we can see, voltages range from milivolts to kilovolts and pulse duration ranges from nanoseconds to even seconds. For higher amplitude, shorter pulses should be used, while for lower amplitude, longer pulses should be used to create similar response of electroporation. What is more, gene transfer and cell fusion requires additional pulses of low voltage (electrophoretic and dielectrophoretic pulses) to drive molecules through membrane into the cell. For such a wide range of parameters pulse generators of different capabilities are needed. Usually generators with special characteristics are developed for different applications. Hence different methods are implemented for pulse generation. Regarding what concept is used for pulse generation, there are five main groups of electroporation signal generators that in other words can be called electroporators. These are capacitor discharge generators, square wave generators, analog generators, Blumlein generators and diode opening switch generators. Next, these types of electroporators are going to be briefly introduced.

1.2. Methods of electroporation pulse generation

Capacitor discharge

This method of pulse generation is the simplest one. Generator has these main parts (**figure 1**) (Rebersek M. and Miklavcic D., 2011): high voltage power supply *V*, a capacitor *C*, a switch *S*, resistor *R*. Operation of such generators requires to charge capacitor first. After turning a switch to position 2, capacitor discharges through load Z_L, creating a pulse. In this case the pulse is exponentially decaying. Required pulse amplitude is predefined by power supply voltage. Load

here is a sample to be electroporated. Time constant which defines pulse length is equal to $Z_L C$. Since impedance of sample decreases during pulse (Pavlin M. *et al*., 2005), additional resistor is connected in parallel to stabilize time constant. If resistivity of this resistor is about 10 times smaller than the impedance of load, time constant in good precision can be defined as RC. Exponentially decaying pulses are notorious for low survival rate of cells exposed to them. This is due to pulse shape with long low voltage component (Danfelter M. *et al*., 1998).

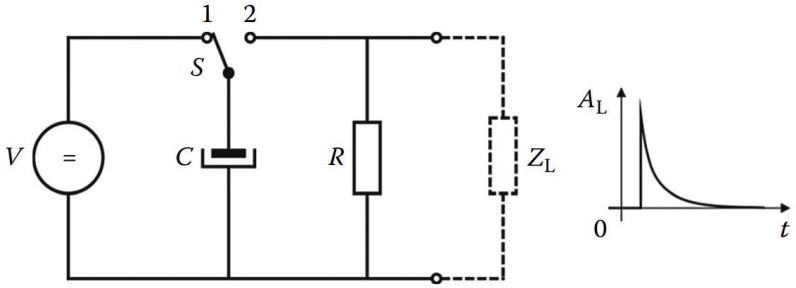

Figure 1. Capacitor discharge pulse generator circuit

Square wave pulse generators

Concept of generating square wave pulses is similar to that of capacitor discharge. High voltage power supply *V* is constantly charging capacitor *C*, while switch S is switched on for short time to generate a pulse in the output (**figure 2**) (Rebersek M. and Miklavcic D., 2011). It is important that the switch would be fast enough to generate pulses with short rise and fall times. For fast switching power MOSFET (metal oxide - semiconductor field effect transistor) or IGBT (insulated gate bipolar transistor) transistors are used. These semiconductor devices will be analyzed more detailed in the next chapter about pulse generator switches. Control unit is implemented to drive the switching of transistors. Despite good control over pulse amplitude and duration, these generators have a drawback. Pulse amplitude drops during pulse. As can be seen from picture, this drop is denoted as ΔV_L. Amount of drop depends on time constant of the system and pulse duration. In order to minimize amplitude voltage drop, bigger capacitance is needed. On the other hand, bigger capacitance results in more difficult amplitude change between pulses and safety issues.

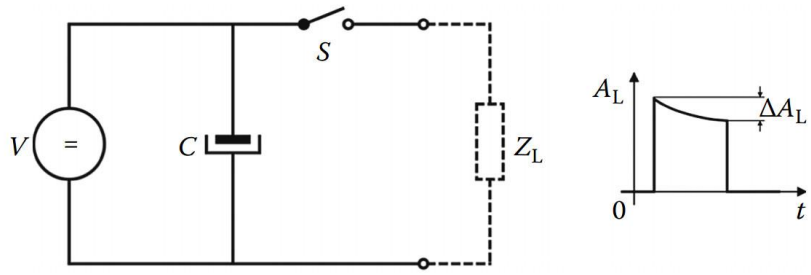

Figure 2. Square wave generator circuit

Analog generator

Analog generators are advantageous because they can generate pulses of desired shape. Main constituents of these generators are high voltage power supply *V*, capacitor *C*, low signal generator F_G, linear switch *Q* and voltage divider (**figure 3**) (Rebersek M. and Miklavcic D., 2011). The shape of the pulse is at first generated in analog low voltage signal generator. This signal controls the switch which linearly amplifies signal. For the switch, again power MOSFETs or IGBTs are used for the same reasons of fast switching and high power. Amplitude drop during pulse is also solved. Power supply is set to higher voltage then required for the pulse. This excess voltage is usually about 10 %. If capacitors voltage does not drop below required impulse amplitude during the pulse, then no amplitude drop occurs. Linear generators are characteristic for good control and flexibility of signal parameters. However, main drawback is that limited voltage and current are possible (few kV and A) due to limited power capabilities of transistors (Rebersek M. and Miklavcic D., 2011).

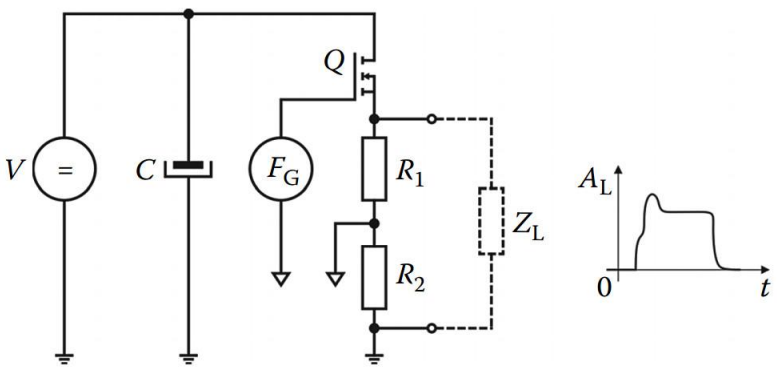

Figure 3. Analog pulse generator circuit

Blumlein generators

This method is used to generate pulses of the length of nanoseconds. The principle in Blumlein generators (a type of pulse forming networks) is to replace capacitors with capacitive transmission lines. Elements of such generator are high voltage power supply *V*, switch *S*, charging resistor *R* and transmission lines T_1, T_2 (**figure 4**) (Rebersek M. and Miklavcic D., 2011). Pulse is generated when switch is turned on and capacitance of transmission lines is discharged through load. Since pulses are of time frame of ns, reflections in the line must be addressed. In order to avoid pulse reflection, impedance of the load has to be twice the impedance of the transmission line (Rebersek M. and Miklavcic D., 2011). In this case pulse duration is equal to twice the electrical length of the line. Very fast switching devices have to be used because pulses itself are very short and long rise time of switch would distort square wave pulse. Spark gaps are usually used in extremely short pulse Blumlein generators.

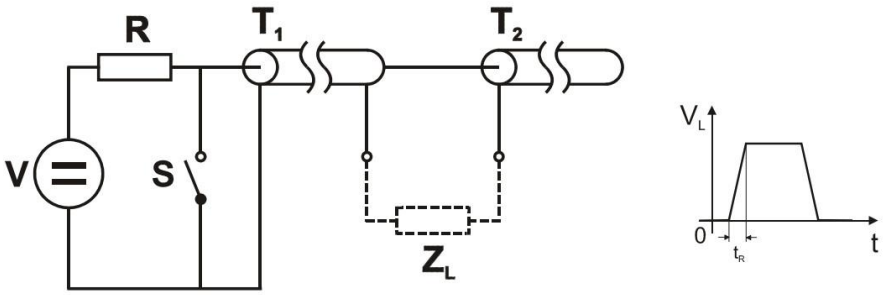

Figure 4. Blumlein generator circuit

Diode opening switch generator

These generators also create nanosecond pulses. They are comprised of high voltage power supply *V*, switch *S*, charging resistor *R*, *LC* oscillator L_1, L_2, C_1 and C_2, diodes D_x (**figure 5**) (Rebersek M. and Miklavcic D., 2011). Before turning on the switch, Capacitor C_1 is charged. After turning the switch on, oscillations begin in the circuit. Diodes are used to form a pulse by interrupting oscillations. This kind of generation produces pulses similar to Gaussian shape. Diode opening switch generator has advantages over Blumlein generators. The switch does not need to commutate the whole amplitude of the pulse and they don't need to be faster than the pulse itself. On the other hand, the circuit is much more complicated than that used for Blumlein generators (Rebersek M. and Miklavcic D., 2011).

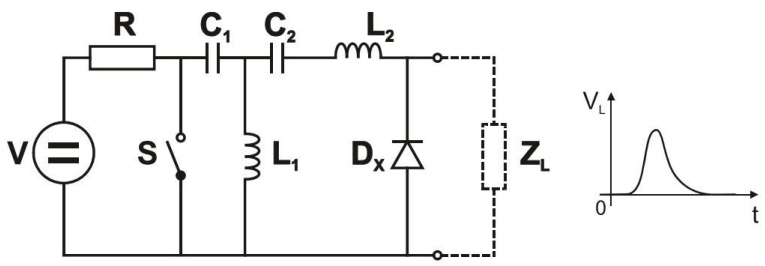

Figure 5. Diode opening switch generator circuit

Choice of appropriate electroporator depends on the application, i. e., what is wanted to achieve by electroporation. Application of electroporation determines what pulse properties are needed, hence defining the most appropriate pulse generation method. Various advantages and drawbacks of different generators should be also considered before choosing equipment for electroporation. Summarized table of advantages and disadvantages of above mentioned generators is presented in **table 2** (Rebersek M. and Miklavcic D., 2011).

Table 2. Advantages and disadvantages of different pulse generation methods

Method	Advantages	Disadvantages
Capacitor discharge	Simple and inexpensive construction Simple control system High voltages	Poor flexibility and control of parameters Low cell survival Low repetition frequency
Square wave generator	Simple control system High currents Good control and flexibility of time parameters	Amplitude drop during the pulse Low amplitude flexibility
Analog generator	Wide flexibility of pulse parameters Arbitrary pulse shape	Complex control system Limitation of power dissipation
Blumlein generator	Simple design High voltages and currents Possible variable duration and polarity	Complex switching element Required impedance matching
Diode opening switch generator	Accessible electrical components Variability of the load impedance	Complicated design Low output power

1.3. Pulse generator switches

One of the most important elements in the pulse generator is the switch. Pulse shape is highly dependent on the proper working of the switching device. It is necessary that switch would have short switch on and switch off times in order to have short rise and fall times of the pulse. It is important to know range of the electrical parameters that will be used in order to design appropriate switching in the generator. Main parameters affecting selection of the switching design are pulse voltage, current and pulse length. The maximal voltage and current of electroporation pulses define switching elements that should be used in the generator since particular element works best only in some specific voltage and current range. For low voltage electroporation pulses of up to several volts operational amplifiers are usually used as a switch. For pulses from several volts to few kilovolts various transistors are used. For very high electroporation pulse voltages reaching over few kilovolts spark gaps are used. Variants of switching devices in electroporators are shown in **figure 6**.

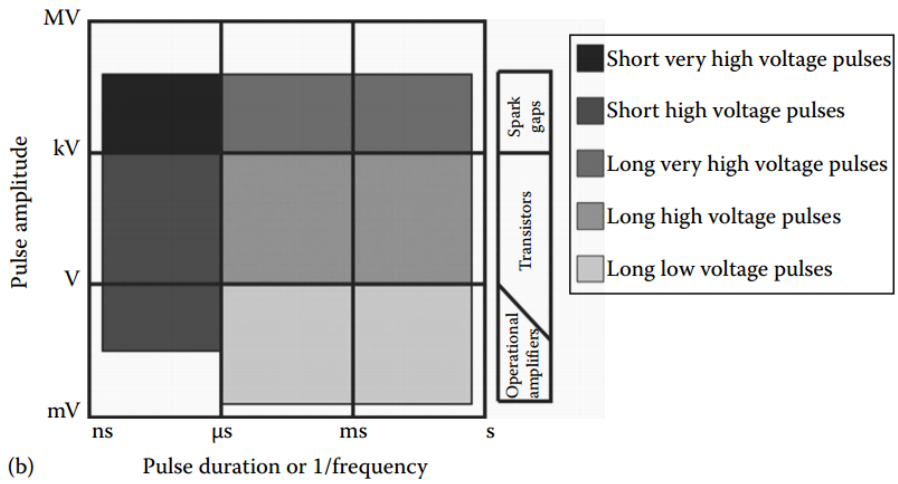

Figure 6. Five different areas of electroporation pulse generation and corresponding switching methods used (Rebersek M. and Miklavcic D., 2010)

With increased performance of power semiconductors application of semiconductor switches is becoming wider. Recent trend is to use semiconductor devices for pulsed power supplies to be used for biotechnology and medical applications. These devices are mainly Metal Oxide Semiconductor Field Effect Transistors (MOSFET) and Insulated Gate Bipolar Transistors (IGBT). There is a number of researches made to compare and investigate pulse generators with different semiconductor switches. A paper by Hickman, B., Cook, E., 2002 describes how several MOSFETs and IGBTs were tested for use in pulse generation applications and it was noticed that MOSFETS were capable of faster turn on and turn off times. However, IGBTs had higher voltage and current ratings than MOSFETs. Capabilities of higher voltages makes IGBT to be used in applications then stronger electrical fields are needed in biotechnology research. IGBT based pulse generator was used to investigate the viability of certain bacteria (*E. coli*) after exposure to pulsed electric fields up to 1.5 MV/m in other paper by Aly R.E., Joshi R.P. et al., 2001. Since MOSFETs are mainly considered as faster switches there is a number of described uses of MOSFET switches in pulsed generators. Pulse generator generating voltages up to 300 V with microcontroller driven MOSFET is designed in paper by Ching, C. T-S., Sun, T-P. et al., 2012. A similar approach is taken in the work by Rodamporn, S., Beeby, S.P. et al., 2007 where MOSFET switch is used in electroporator design and construction. IGBTs are also applied in pulse generators. Two IGBT transistors can be used in some electroporation devices. The first is directly driven by control unit and determines the desired pulse length while the other is used to limit the maximum length of each pulse to some desired safety limit in the event of failure (Bertacchini, C., Margotti, P.M. et al., 2007).

Power MOSFETs are advantageous in their characteristics of switching speed, peak current capability, easily controllable, wide safe operating area (SOA) which describes the capability of the transistor to withstand high levels of voltage and current at the same time. These advantages are

mainly a consequence of the fact that MOSFETs are majority charge carriers. On the other hand, IGBT has better conduction characteristics together with ease of control, wide SOA, peak current capability. Despite the fact that MOSFETs are faster, improvements on IGBTs performance play in favor of IGBTs. Differences between majority and minority carriers strongly affect turn off time of the transistor. It is required that no charges should be left for the resistor to turn off. This means that residual minority carriers in the IGBT transistor prevent its fast switching. This may have undesired effects on switching time and pulse shape in pulse generators together with decreased switching frequency in frequently switching devices.

Basic cross section of the N-channel IGBT is shown in **figure 7**. It is basically an N_channel MOSFET constructed on a p-type substrate. Additional n+ buffer layer is used in punch-through (PN) transistors. Equivalent scheme of IGBT is shown in **figure 8**. IGBT consists of PNP transistor driven by an N-channel MOSFET in an equivalent circuit. As a consequence, operation of IGBT is similar to a power MOSFET. Positive voltage applied between emitter and gate terminals makes electrons to be drawn toward the gate terminal in the body region. If the emitter-gate voltage exceeds some threshold value, enough electrons are drawn toward the gate and a conductive channel is formed across the body region. This channel allows electrons to flow from the emitter to the collector. As a result of that, holes are drawn from p-type substrate toward the emitter through the drift region.

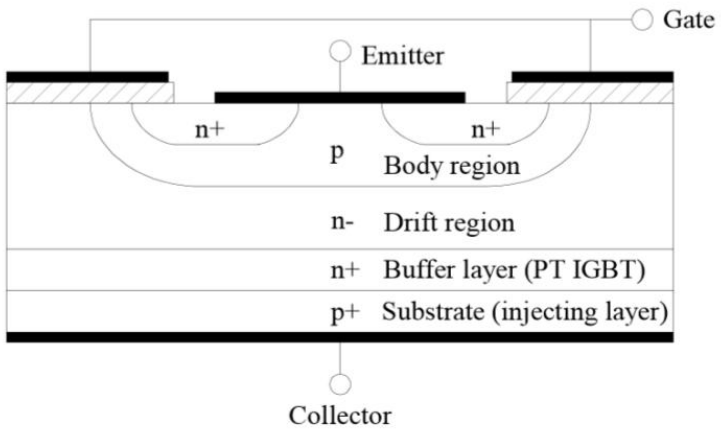

Figure 7. N-channel IGBT cross section (Dodge, J.P.E., Hess, J., 2001)

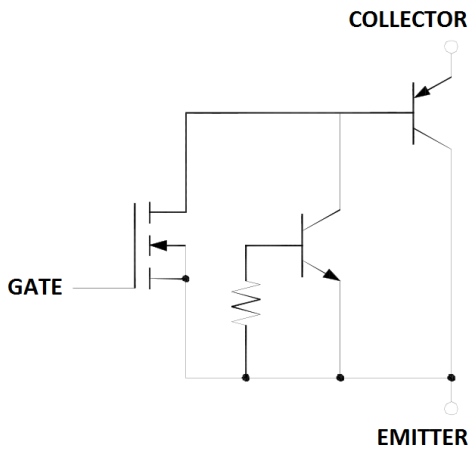

Figure 8. IGBT equivalent circuit (International Rectifier Company, 2012)

IGBT transistor has a smaller on-state voltage drop temperature coefficient compared to MOSFET. **Figure 9** shows graph of voltage drop versus temperature of two specific transistors. One of them is IGBT (IRGP4063D) while another is MOSFET (IPP60R099C6). IGBT has almost constant voltage drop while MOSFET has rapidly increasing voltage drop. In the region of higher temperatures (more than 100 °C) IGBTs have more than four times smaller voltage drop across transistor compared to MOSFETs.

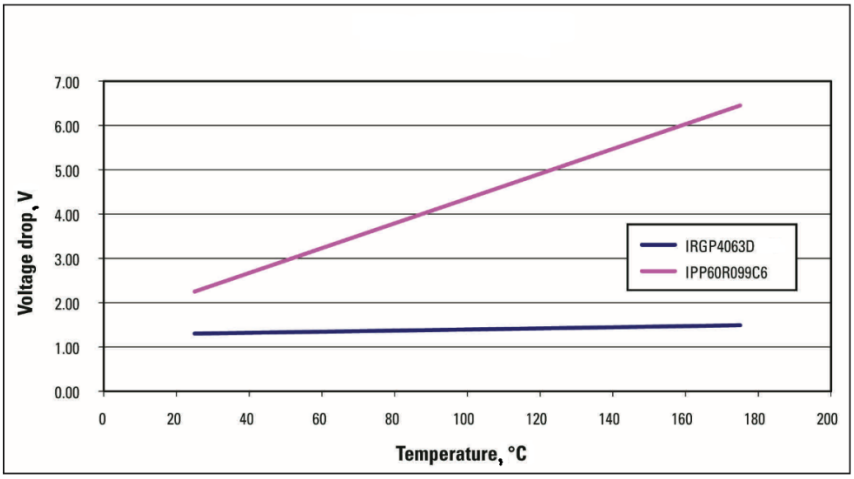

Figure 9. On-state voltage drop dependence on the temperature of two semiconductor devices operated at the same current density. IRGP4063D – IGBT, IPP60R099C6 – MOSFET (International Rectifier Company, 2012)

The other important characteristic that is also in favor of IGBT is voltage drop dependence on the applied voltage rating. Voltage drop in IGBT is determined by minority carrier injection. Voltage drop across IGBT and MOSFET is shown in **figure 10**. It is worth stressing that voltage drop increase is negligible with increased applied voltage rating in IGBT transistor. This characteristic is important in applications when precise pulse voltages are needed.

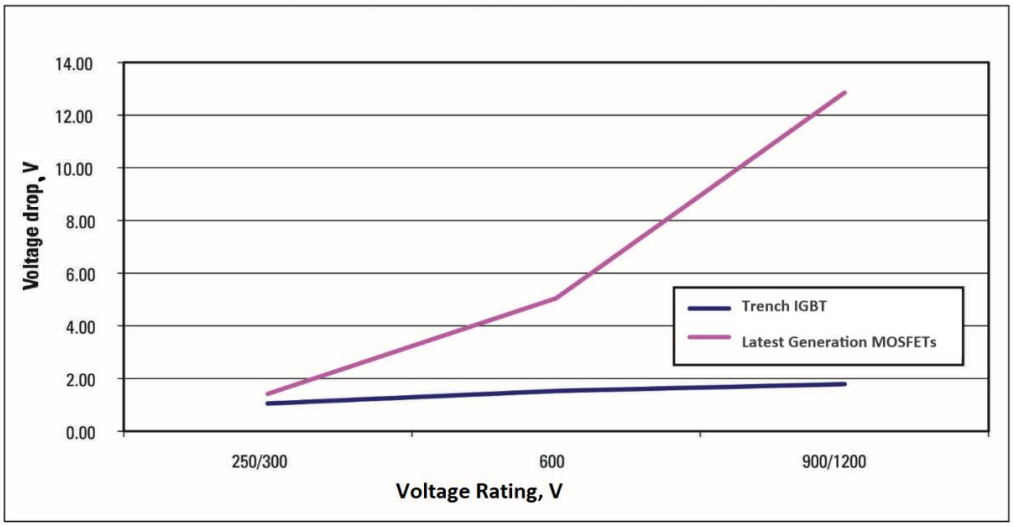

Figure 10. On-state voltage drop dependence on the voltage rating of the two types of devices (International Rectifier Company, 2012)

Another type of switches used in pulse generators is spark gaps. These switches consist of small chamber filled with pressurized gases. Electrodes are placed in that chamber at some distance apart from each other. Usually two electrodes are used, but if some control is required, additional electrodes can be inserted as well (Frey, W. et al., 2009). By applying high voltage to the electrodes, high strength electric field is created in the area between electrodes. Strong electric field ionizes gases and makes it to conduct electric current. In a self-breakdown operation mode spark gap turns on when electric field across electrodes reaches magnitude sufficient for breakdown. Self-breakdown voltage, also referred as ignition voltage, is adjusted by changing distance between electrodes. Additional adjustment is possible by changing pressure of the gases. Another type of operation is triggered breakdown. Some initial electrodes are generated at voltages lower then self-breakdown in this mode of operation. Electrons can be generated by focusing laser beam on the electrode (Dougal, R. A. and Williams, P. F., 1984). Laser induced photoemission of electrons from the electrode is present in this case.

Spark gap switches are usually used for pulses with amplitudes higher then few kilovolts. They are also fast switches having short pulse rise and fall times and are used for generation of short pulses ranging from 10 ns with maximal amplitude of 12.5 kV (Balevičius, S. et al., 2013). The rise time of the spark gap could reach values of 0.6 ns according to the same authors. However, spark gaps have shorter lifetime compared with semiconductor switches because of degradation of electrodes.

1.4. Review of commercially available electroporators

Depending on the needs, electroporation generators can be designed and constructed by user or they can be obtained from some of the commercially available electroporators. There are manufacturers producing electroporators for the market. There is a range of properties of these electroporators for different applications. There are less than ten more known brands of electroporators producing manufacturers.

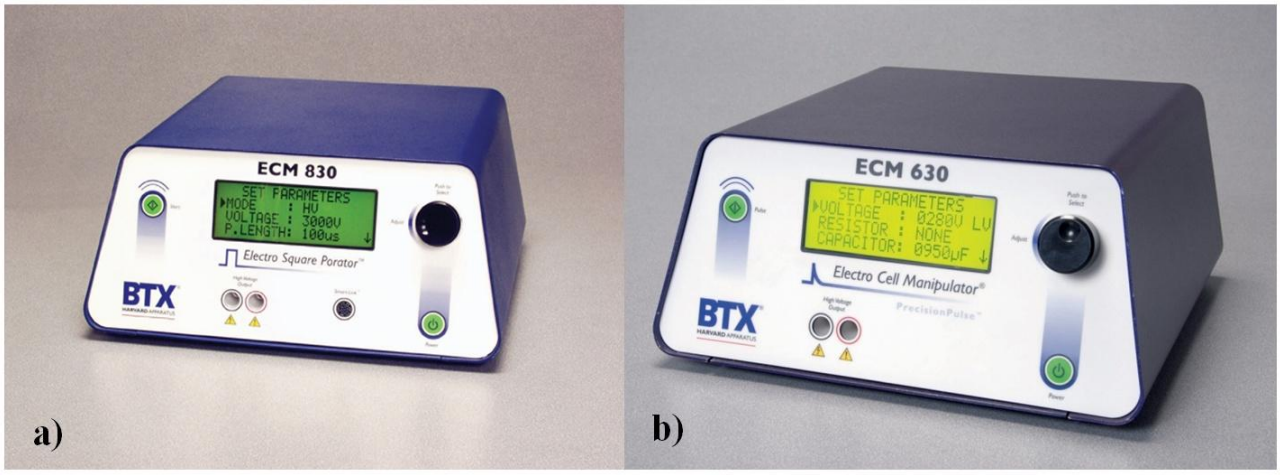

Figure 11. Commercially available electroporators from BTX. a) Square pulse ECM 830; b) Exponential pulse ECM 630

Commercially available electroporators cover applications ranging *in vitro*, *in vivo* cell manipulation. Clinical device for irreversible electroporation is made by "Angiodynamics". A number of electroporators for cell fusion is available ("RMX2010" by "Clonaid", "Hybrimune" by "Cytopulse" based on "BTX" device). Gene transfer can be made using "Cliniporator" by "IGEA". Available pulse voltages range from tens of volts to 3 kV. There are electroporators with predefined pulse length and with adjustable pulse length which depends on capacitor batteries installed in device. Summarized information about commercially available electroporators using Rebersek and Miklavcic, 2011 and information provided by manufacturers is presented in **table 3.** Ones of the most widely used commercial electroporators are made by BTX. BTX 830 electroporator produces square wave electrical pulses while BTX 630 produces exponential output. These electroporators, according to manufacturer, are suitable for electroporation of all types of cells. BTX electroporators are shown in **figure 11.**

Table 3. Summary of commercially available electroporators

Company/ Product	Output shape	Voltage range, V	Time constant or pulse length	Applica-tions	Pulse generation method	Comments	Additional information
BIO-RAD							
Gene Pulser Xcell	Expon. Square wave	L.V. 10-500 H.V. 500-3000	τ=0.5ms-3.3s T=0.05-100 ms	All cell types	Capacitor discharge	Minimum sample resistance: L.V. – 20 Ω H.V. – 600 Ω	http://www.bio-rad.com/
Micro Pulser	Expon.	200-3000	τ=1-5 ms	Bacterial, yeast	Capacitor discharge	Sample resistance > 600 Ω	http://www.bio-rad.com/ http://www.bio-rad.com/webroot/web/pdf/lsr/literature/4006174B.pdf
BTX							
ECM 830	Square wave	L.V. 5-500 H.V. 30-3000	L.V. T=10µs-10 s H.V. T=10µs-600 µs	All cell types	Square wave generator		http://www.btxonline.com/ecm-830-square-wave-electroporation-system/
ECM 630	Expon.	L.V. 10-500 H.V. 50-2500	L.V. T=25µs-5.2 s H.V. T=625µs- 79 ms	All cell types	Capacitor discharge		http://www.btxonline.com/ecm-630-exponential-decay-wave-electroporation-system/
Agile Pulse	Square wave	50 – 100	T = 50 µs – 10 ms	Electroche-motherapy, drug delivery	Square wave generator		http://www.btxonline.com/content/catalogs/BTX_Catalog_Insert.pdf
Clonaid							
RMX2010	Square wave	5 – 200	T = 10 – 990 µs	Cell fusion	Square wave generator		http://www.clonaid.com/page.php?9
Eppendorf							
Multipora-tor	Expon.	20 – 1200	T=15-500 µs	Eucaryotic cells	Capacitor discharge		http://www.eppendorf.com
IGEA							
Cliniporator	Square wave	L.V. 20 – 200 H.V. 100-1000	L.V. T=1 – 200 ms H.V. T=50µs -1 ms	Tissue electropora-tion	Capacitor discharge		http://www.igeamedical.co.uk/skyblucms/resources/cliniporatortechnicalsheet-1-1.pdf

As it can be seen, there is a huge number of commercially available electroporators. They range one from another to encompass all variety of different uses of electroporation. Commercial electroporators are usually designed and constructed to satisfy requirements for some special case or narrow range of electroporation uses. They also usually come with manufacturer created protocols of use. These protocols define exact use of given electroporator. They give instructions of how equipment should be used in respect with some specified samples of cells. Manufacturer assures that by using protocol, defined pulse shape and other pulse parameters as well as reliable results will be acquired. Using protocols is practical and convenient when routine experiments with

some protocol defined cells are done. However, protocol suited electroporators are not so practical for electroporation of non-protocol cases. When conducting scientific works, usually non-protocol cases are researched so electroporators with provided protocols are not so practical to use. This issue would not be so significant if electroporator had appropriate pulse current or voltage control implemented. That would allow to see output of electroporator in various uses and also to have control over experiment. However, this functionality is not present in majority of commercial electroporators as well as BTX created ECM series electroporators. For the control of the pulse parameters, at least output connection to oscilloscope should be made. Capability of seeing electroporator output in oscilloscope is of great importance in electroporators used for scientific research. This can show that real pulse shape is not as it is expected according to electroporator used.

2. DESIGNING OF PULSE GENERATOR

2.1. Required characteristics of electroporators

Some commercial electroporators produce electrical pulses of wide range of voltages from few volts to several kilovolts. This is achieved by having two operational modes – low voltage and high voltage. Wide voltage range is of great importance in scientific use of electroporators since it allows analysis of electroporation of cells in different situations and various sample sizes. As it was showed in **table 1**, pulse voltage amplitude varies greatly from one application to another ranging from milivolts to kilovolts. Of course, it is not likely that all sorts of different electroporation type experiments would be executed using one electroporation generator. However, wide voltage range is necessary for valid experimental research.

Another significantly important parameter of pulse generator is pulse duration. Capability to change duration of pulse in wide range is as important as it is to have wide range of voltage amplitudes. The reason is again the same as speaking about voltages. This feature allows process of electroporation to be analyzed for various samples and different cells. Again, referencing **table 1**, it can be seen that duration of pulses needed for different electroporation type range from nanoseconds to seconds. However, implementation of such a wide range of pulse duration in a single generator is practically impossible. Very different pulse durations are created by using different type of generation method. Single pulse generator should be capable of producing pulses at least in wide range of some particular region of interest in witch research is being done.

Great majority of commercial electroporation generators are producing one of two types of pulses. It is either exponentially decaying or square wave pulse. If square wave pulse has precise form it is easily describable by its pulse amplitude and length. On the other hand, exponentially decaying pulses are not so defined because of their trailing part of the pulse. Electroporation pulses used for research preferably should have amplitude and length as precise as possible. This requirement mainly comes from the fact that some electrical field strength threshold has to be reached for electroporation process to occur. This threshold is usually unknown during electroporation research. This means that pulses with precise both amplitude and length should be used in this case. What is more, these parameters should be independent from one another. For example, exponential pulses with the same time constant and different amplitude also have different amplitude at the same time moment. This means that duration of the pulse when amplitude exceeds electroporation threshold depends on the initial pulse amplitude (**figure 12**). Example in the figure shows that if the threshold is 0.8 arbitrary units, pulse duration above threshold is different for pulses with different initial amplitude but the same time constant. This dependency makes

exponential pulses impractical to use in research activities because it becomes difficult to estimate impact of the pulse to the sample of cells and hence to control the experiment.

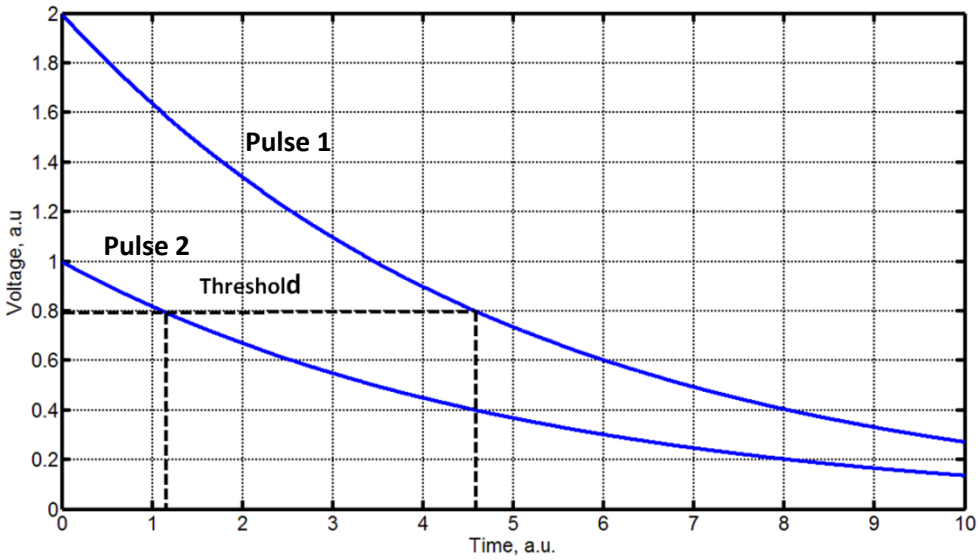

Figure 12. Two pulses with the same time constant and different initial voltage, $V_{init1} > V_{init2}$

To sum up all what was mentioned, it can be highlited that generators used for electroporation research activities should possess three main characteristics:

1. Generate square wave pulses.
2. Operate in wide pulse length and amplitude range.
3. Have current or voltage control.

2.2. Determination of pulse length ranges of generator

Square wave pulses are mainly generated using capacitor discharge and fast switching to switch on and off discharge current. Depending on how fast switching is achieved, some rise and fall times of the pulse are present. Fast switching must be implemented in order to have better pulse form. Since square wave pulses are generated by capacitor discharge, some amplitude drop is present during pulse time. Some specifics about it were mentioned in the section about square wave pulse generation. It is usually required that this pulse drop would not exceed 10 % of initial pulse amplitude. If this requirement is met then pulse is said to be square wave pulse. Rate of discharge depends on time constant of circuit which is impedance multiplied by capacitance. If time constant is known, maximum length of the pulse can be calculated using this fact that amplitude drop must not exceed 10 % of initial amplitude.

In design of analyzed generator different capacitors were used. In order to achieve various capacitances they are designed to have possibility to be connected between each other in various

ways. Two types of capacitors were designed to use: four electrolytic and four polymer capacitors. Information about these capacitors is shown **table 4**. Possible connection schemes of capacitors are shown in **figure 13**. What is more, resistance of the circuit must be known in order to calculate time constant. If no resistor is connected in parallel then circuit resistance is equal to resistance of the sample. Furthermore, resistance of the sample also depends on the geometry of cuvette. Standard cuvettes manufactured by *BTX* will be taken into consideration for the following calculations. There are few types of cuvettes but the smallest one with the distance of 1 mm between electrodes will be considered. Resistance of the sample in this cuvette ranges between 40 Ω and 60 Ω. It can be approximated with reasonable precision that resistance is 50 Ω.

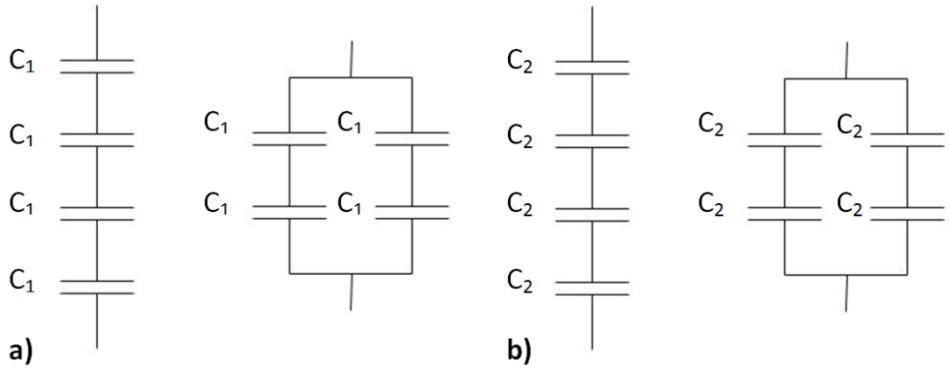

Figure 13. Capacitor connections used in pulse generator. a) Electrolytic capacitor; b) Polymer capacitor

Table 4. Information about capacitors used in pulse generator

Capacitor type	Capacitance, μF	Maximum voltage, V
Electrolytic	1000	450
Polymer	52	2000

Depending on time constant of the system well defined maximal pulse length can be generated to meet 10 % amplitude drop rule. Maximum pulse lengths are going to be calculated for various capacitor connections in the proceeding steps. Exponential decay of voltage is described by exponentially decaying time function

$$U(t) = U_0 e^{-\frac{t}{\tau}}, \qquad (1)$$

where U_0 is initial voltage of capacitor battery, τ – time constant of the system (τ = RC).

Taking $U = 0.9U_0$ and solving for time, equation for maximum pulse length is obtained

$$t_{\max} = \ln(\frac{1}{0.9})RC = 0.105RC\,. \qquad (2)$$

As it can be seen, length of the pulse depends only on time constant of the circuit. Since resistance is dependent on geometry of sample, it can be approximately known by choosing certain cuvette. Hence time constant and maximum pulse length can be chosen by changing capacitance of the circuit. Capacitances of different connections of capacitor battery are present in **table 5**. Capacitances are calculated for connections shown in **figure 13**. Both types of capacitors are taken into consideration in these calculations. Maximum voltages of the capacitor batteries are calculated as well. Connection A represents all capacitors connected in series while B represents connection when two capacitors are connected in series and then in parallel.

Table 5. Characteristics of different capacitor connections

	Connection A	**Connection B**
Polymer capacitor		
Capacitance, μF	13	52
Maximum voltage, kV	8	4
Maximum pulse length, ms	0.07	0.27
Electrolytic capacitor		
Capacitance, μF	250	1000
Maximum voltage, kV	1.8	0.9
Maximum pulse length, ms	1.3	5.3

It can be seen that the longest pulses are generated using capacitors connected in parallel. What is more, longest pulses cannot be made with highest voltage amplitude. High pulse amplitude can only be made for shorter pulses, in this case – up to 70 μs. The design of this generator is such that it could cover pulse lengths up to 20 ms and voltages up to 8 kV. However, restrictions occur on amplitude for long pulses and on maximum pulse length for high voltage pulses.

The above mentioned restrictions on pulse length and amplitude due to limited capacitances and voltages of capacitors comply with the fact that both long pulse duration and high amplitude is dangerous for sample cells. This danger occurs because of resistive heating. Higher voltage creates stronger electrical current and longer pulse duration builds up emanating heat. That makes long high voltage pulses impractical to use for electroporation because of thermal damage of cells.

Effect of resistive heating of the sample must be taken into consideration while designing pulse generator. This heating puts upper limits for the combination of pulse length and voltage. In the proceeding steps maximum duration of pulse will be calculated for different sample geometries and voltages taking resistive heating into account. Three different sample geometries representing different cuvettes are considered. Voltage range is taken according to values obtained in **table 5**. Temperature increase threshold of the sample is chosen to be 5 °C and 10 °C.

Calculation method is based on heat equilibrium of the system. Heat from resistive heating is absorbed by sample and this amount of heat raises temperature according to specific heat and mass of the sample material. Heat due to resistive heating is represented by equation

$$Q = \frac{U^2}{R} t, \qquad (3)$$

where U is voltage of the pulse, R – resistance of the sample, t – duration of the pulse.
On the other hand, heat amount absorbed by sample material is

$$Q = cm\Delta T, \qquad (4)$$

where c is specific heat of the sample material, m – mass of the sample, ΔT – temperature increase.
Pulse length is short enough so that negligible amount of heat is transferred from sample to environment. This means that adiabatic process is considered here and equation for calculation of maximum pulse length is as follows

$$t = \frac{cmR\Delta T}{U^2}. \qquad (5)$$

In order to make these calculations specific heat of the sample material must be known. Since sample is usually based on water solvent, specific heat of the water (c = 4200 J/(kg·K)) is used. Another required value is the mass of sample. It is calculated assuming that sample density is equal to water density. Results of the calculations for three cuvette sizes are presented in the **table 6**.

Table 6. Characteristics of cuvettes and corresponding samples

Characteristics	**A cuvette**	**B cuvette**	**C cuvette (BTX)**
Distance between electrodes, mm	1	2	1
Volume, µl	110	200	140
Sample mass, kg	$1.1 \cdot 10^{-4}$	$2.0 \cdot 10^{-4}$	$1.4 \cdot 10^{-4}$

Results of the calculations of maximum pulse length are presented in the **table 7**. Increased voltage decrease maximal allowed pulse length by the square of the voltage. This makes high amplitude pulses applicable only for very short duration in order not to make any thermal damage to the sample. The same results are presented in **figure 14** by using graphs. These show dependency between pulse amplitude and maximum allowed pulse length. Maximum duration can be acquired for any voltage from these curves.

Table 7. Maximum pulse lenghs according to restrictions on sample thermal damage

ΔT = 10 °C	0.45 kV	0.9 kV	1.8 kV	2 kV	4 kV	8 kV
A cuvette t_{max}, ms	1.14	0.29	0.07	0.06	0.014	0.004
B cuvette t_{max}, ms	2.07	0.52	0.13	0.11	0.03	0.007
C cuvette t_{max}, ms	1.45	0.36	0.09	0.07	0.02	0.005
***ΔT* = 5 °C**						
A cuvette t_{max}, ms	0.57	0.14	0.04	0.03	0.007	0.002
B cuvette t_{max}, ms	1.04	0.26	0.07	0.05	0.013	0.003
C cuvette t_{max}, ms	0.73	0.18	0.05	0.04	0.009	0.002

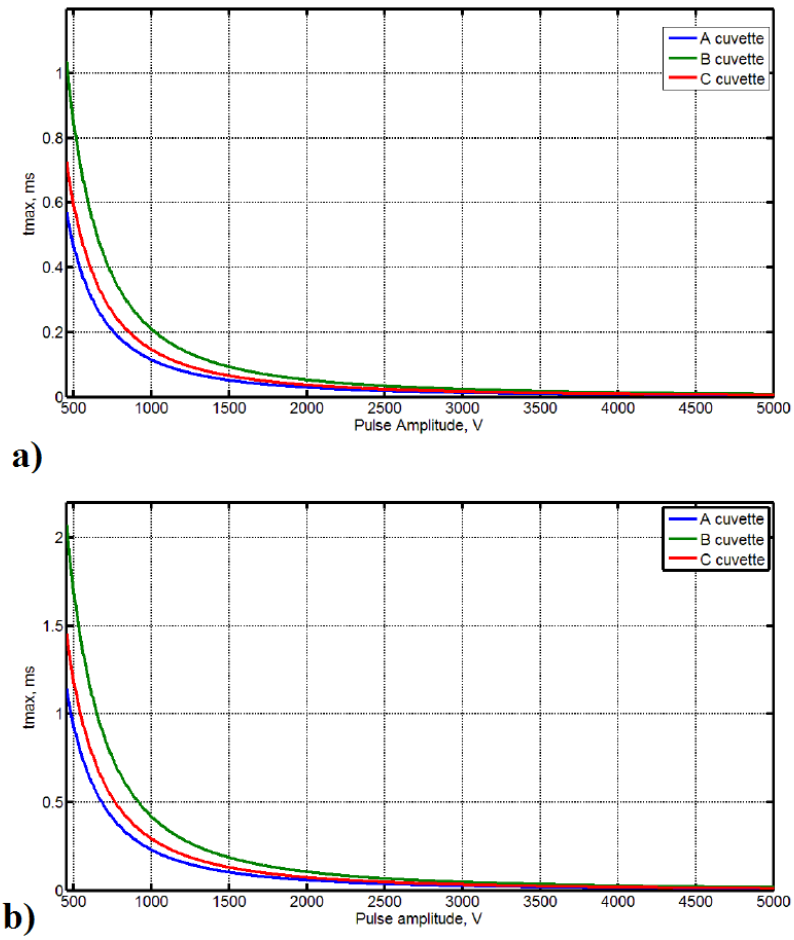

Figure 14. Dependency between pulse voltage and maximum acceptable pulse duration regarding thermal effect on the sample. a) for *ΔT* = 5 °C; b) for *ΔT* = 10 °C

To sum up, it can be said that there are two aspects that determine duration of the pulse. The first one is natural effect of resistive heating of the sample which is determined by pulse amplitude. The second one is restrictions made by capacity of the circuit. Long pulses require high

generator capacitances to achieve. Having these things in mind appropriate parameters of electroporation generators, required components and best methods of generation can be chosen for designing and constructing electroporation generators.

Capacitors described in **table 4** and their connections shown in **figure 13** were chosen having in mind thermal effects of the corresponding pulses to the sample. Heat transferred to the sample is directly proportional to the square of the voltage applied (equation 3). Higher capacitance is needed for the longer pulses. On the other hand, lower voltages should be used for longer pulses to avoid thermal damage to the sample. Hence connection having highest capacitance and lowest voltage is used for the longest pulses. It is a parallel connection with electrolytic capacitors (C = 1000 μF, V = 0.9 kV). Shortest pulses are usually wanted together with highest voltages. Short pulses allow to have high voltages since smaller amount of heat is deposited to the sample during short duration of time. High voltage and low capacitance connection should be used for shortest pulses. For that reason polymer capacitors with lower capacitances are connected in series to acquire lowest possible capacitance and highest voltage (C = 13 μF, V = 8 kV). Connections with intermediate capacitance and voltage values are used for pulses between shortest and longest available. Commutation of different capacitor connection not only allows to avoid thermal damage to the sample but also enables to charge capacitors faster for short pulses and saves energy.

2.3. Simulation of generator pulse

Pulse generation was simulated using *LTSpice* software. Simulation model was built using capacitor discharge pulse generation method. First of all, in order to get accurate results, appropriate switch model should be made. In this generator high voltage IGBT transistor switch is used. *LTSpice* has many transistor models in its library, however IGBT transistor used in this generator was not included in these libraries. This was the reason why IGBT transistor model was needed to be made at first.

Table 8. Main switching characteristics of the IXEL40N400 IGBT transistor

Symbol	Characteristic	Value
$t_{d(on)}$	Switch on delay time	160 ns
t_r	Pulse rise time	100 ns
$t_{d(off)}$	Switch off delay time	630 ns
t_f	Pulse fall time	425 ns

Very high voltage IGBT transistor **IXEL40N400** manufactured by *IXYS* was used in the generator. Hence appropriate model was needed to be made to represent this switching transistor. According to the device data sheet, main characteristics influencing its switching performance are declared in **table 8**.

Standard test conditions for obtaining these characteristics include switching (gate-emitter) signal V_{GE} = 15 V, source (collector-emitter) voltage V_{CE} = 2.8 kV. Having these in mind, transistor model deduction circuit was constructed in *LTSpice*. Parameter values of standard VDMOS function were chosen so that output signal of the switch would correspond to the characteristics in the data sheet. Modeling circuit is shown in **figure 15**. Output pulse of adjusted IGBT transistor model is shown in **figure 16**. Pulse duration was chosen to be 1 µs. We can see that real characteristics of delay times, rise and fall times are close to those declared by manufacturer in data sheet. Hence this transistor model was deduced to be approximate enough to be considered as an appropriate for generator modeling. This model was further used in full scale generator model as an IXEL40N400 IGBT transistor switch.

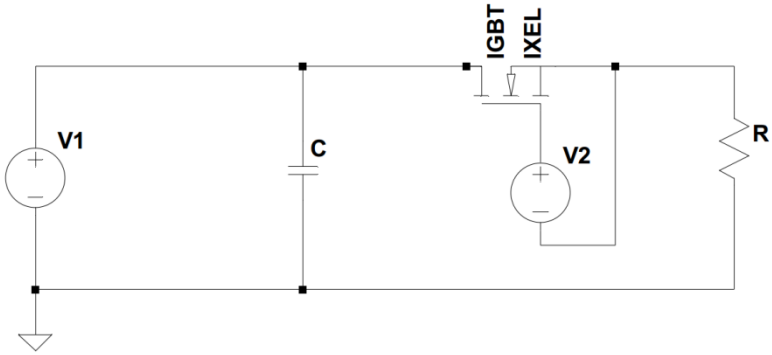

Figure 15. Circuit used for creating IXEL40N400 IGBT transistor model

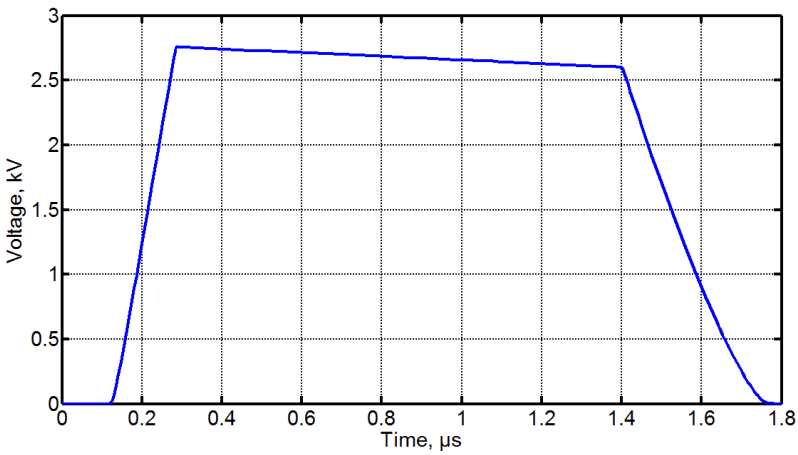

Figure 16. Output pulse of modeled IXEL40N400 IGBT transistor

Furthermore, full model of high voltage pulse generator was built to simulate pulse shape of generator. Above mentioned IGBT was used as a switch. Main components of generator model

include source voltage for charging capacitor, capacitor itself, IGBT switch, switching signal generator (pulsed voltage source) and resistor as a load. Additionally to these main elements series resistor was connected after the switch. It is connected due to IGBT safety reasons. In case of the event then sample in the cuvette is damaged by high voltage, discharge between electrodes can occur. During discharge sample material is ionized and load resistance drops dramatically. That leads to huge current in the circuit and IGBT switch destroying it. In order to avoid destruction of very expensive IGBT switch, series resistor is connected (R_{bal}). It would ballast pulse voltage in case the load is short circuited. Ballast resistance was chosen to be 10 Ω. This value would allow keeping current flowing through switch not greater than 400 A in the case of 4 kV pulse generation. This should be enough to prevent damaging IGBT for pulses up to 10 µs. Furthermore, additional components were also introduced into the model. Considering real power source internal resistance of the source voltage was connected in series (R_{int}). Minor parasitic induction characteristics of capacitor were regarded in low induction inductor connected in series with capacitor (L_C). Every cuvette used for electroporation has two electrodes what usually has area of the container side. Between these electrodes sample is introduced. As sample is having dielectric properties, it can be thought that filled cuvette is like a capacitor. Capacitance of filled cuvette is of nF order. However, it was also considered in model by introducing capacitor parallel to the load resistor (C_{load}). The other effect influencing pulse generation process and pulse shape is line inductance. Although circuit itself does not have any inductive elements by their nature, some parasitic inductance is present due to line cables and other elements. As a result of that, series inductor is connected on the load side of circuit (L_{line}). All these components were included in a circuit used in the model. It is shown in **figure 17**.

Values of the components used in the model and other parameters of the model are present in the **table 9**. Full *LTSpice* snapshot of the model used for pulse shape analysis is present in **Appendix 1**.

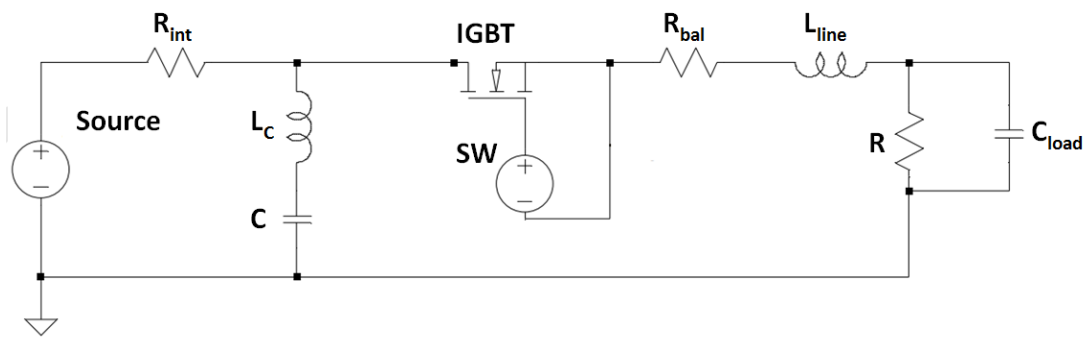

Figure 17. Circuit used for high voltage pulse generator modeling

Table 9. Values of the components and other parametrs of the model

Element name (according to figure 17)	Quantity	Value
Source	Voltage	2 kV
Rinternal	Resistance	2 Ω
Lparasitic	Inductance	100 nH
C	Capacitance	5 – 200 μF (typical 10 μF)
Switch_signal	Voltage	10 V
Rbalast	Resistance	10 Ω
Lline	Inductance	1 – 20 μH (typical 5 μH)
Rload	Resistance	50 Ω
Cload	Capacitance	1 – 10 nF (typical 2 nF)
Pulse length	Time	5 – 10 μs

After the model of capacitor discharge pulse generator was built, analysis of pulse shape was performed. First of all, pulse shape was investigated changing capacitance of the capacitor. This influenced the rate at which pulse voltage is decreasing during the pulse. In order to observe pulse voltage decrease pulse length was chosen to be 10 μs. Capacitance of the capacitor was changed ranging from 5 μF to 200 μF with four different values of 5 μF, 10 μF, 50 μF and 200 μF. Expected voltage drop was observed in the pulse shape (**figure 18**) confirming that capacitance of at least 50 μF should be used for pulses of such length and even greater capacitances for longer pulses. What is more, modeling shows that voltage overshoot is formed at the front of the pulse. Reasons of that will be investigated later in this chapter. Some residual trailing oscillations are formed after back front of the pulse is dropped to zero. For configuration used in model, these oscillations reach only approximately 2 % of the initial pulse height and are negligible. It is worth to point out that delay of the front is also clearly seen and has expected value of approximately 0.15 μs as characteristics of IXIS IGBT transistor determine. Corresponding delay of 0.6 μs of the back front is also present in the pulse. Delays of the switch on and off states shift pulse in time scale and also increase its length by the difference of delay times, $t_{d(off)} - t_{d(on)}$. For the switch used in this generator pulse increase is approximately 0.45 μs. This should be considered in experimental applications, especially in case of generation of pulses comparable with that duration increase.

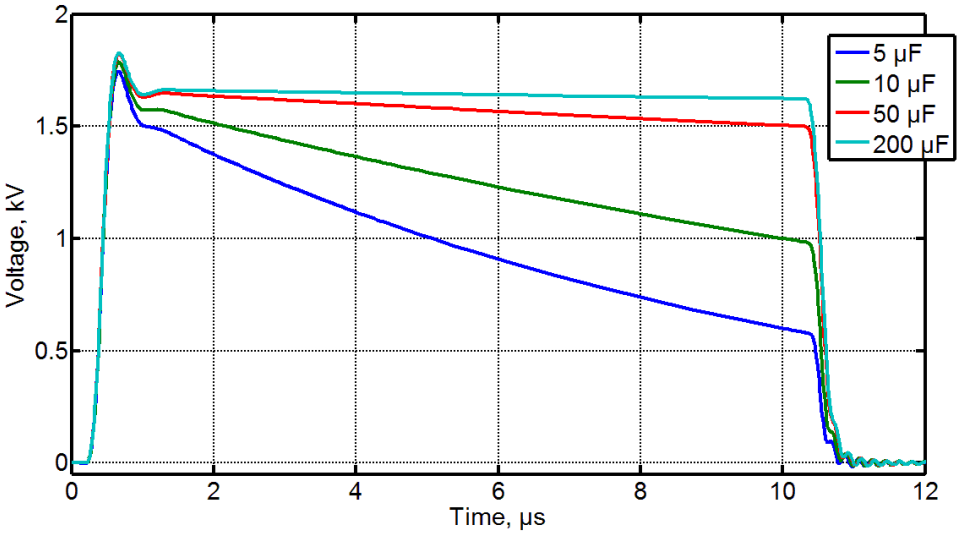

Figure 18. Pulsed voltage across the load when different capacitor capacitances are used

Together with output voltage on the load, current flowing through transistor was also measured in the model. Drain current dynamics during pulse are shown in **figure 19**. The same capacitor values were chosen for running the model. Maximum value of 40 A was reached at the beginning of the pulse as the overshoot takes place for initial capacitor voltage of 2 kV. Such high current confirms that extremely durable IGBTs must be used for switching. However, after transient process settles, current through switch falls to 33 A for highest capacitor capacitance pulse. For the pulses when capacitor is charged to 4 kV, transistor current is reaching 72 A at the peak and 62 A after settling. However, due to series ballast resistance pulse voltage at the generator output is smaller and depends on the active load resistance. Output pulse for load resistance of 50 Ω is decreased to 3.1 kV for settled value. Higher initial capacitor charge is necessary in order to generate pulses of 4 kV on the load. It can be seen that initial voltage of 5 kV should be reached in order to get 4 kV pulses. Modeling results are shown in **figure 20**.

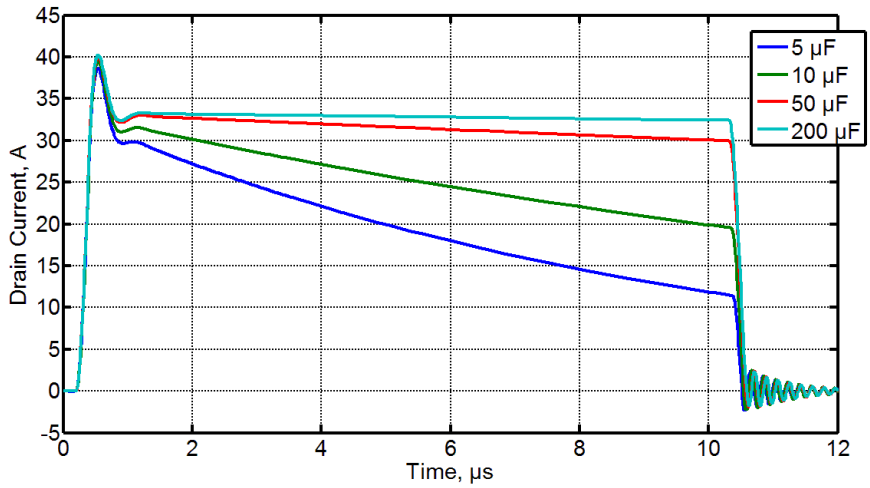

Figure 19. IGBT drain currents when different capacitor capacitances are used

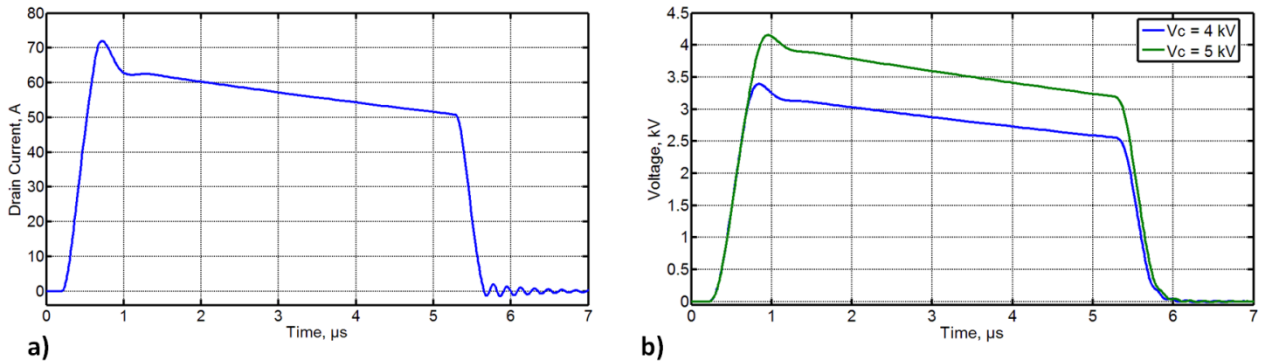

Figure 20. a) IGBT drain current when capacitor is charged to 4 kV. b) Pulsed voltage across the load when capacitor is charged to different voltages

Pulse shape dependence on line inductance and load capacitance was also modeled. Line inductance was changed in the range from 1 μH to 20 μH. Four values have been investigated in this inductance range. Modeling results are shown in **figure 21**. Line inductance has dual effect on the pulse shape of the generator. Firstly, higher inductance is making system more inertial and pulse formation is slower. Rise time is becoming longer with increased line inductance. However, longer formation prevents voltage overshoot which is suppressed. Secondly, trailing oscillations are occurring after pulse fall. These are having higher amplitude with higher line inductance. Amplitude of approximately 6 % of total pulse height is reached when line inductance is 20 μH. On the other hand, inductance up to 5 μH creates oscillations that are negligible. To sum up, line inductance can prevent voltage overshoot, but on the other hand, it creates small trailing oscillations.

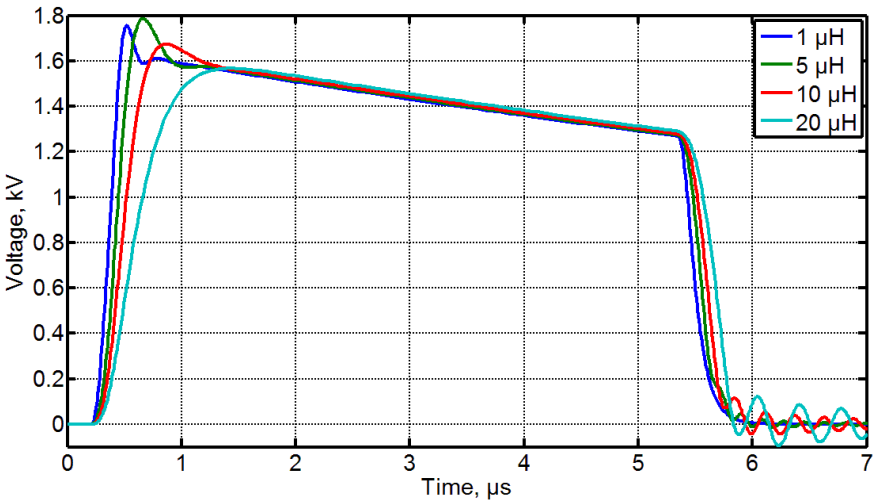

Figure 21. Pulsed voltage across the load with different line inductance of the generator

Load capacitance has also several effects on the pulse shape. They were observed changing load capacitance from 1 nF to 10 nF. Again, four values of capacitance were chosen. Modeling results are shown in **figure 22**. Higher load capacitance results in higher voltage overshoot. Capacitance of 10 nF can possibly result in overshoot of 25 % of the pulse height. That means that appropriate cuvette choice should be made minimizing load capacitance. Yet another significant effect of load capacitance is observed on the back front of the pulse. After IGBT is switched off, charged load capacitance is beginning to discharge. This creates additional current flow in the load. As the result of that fall time of the pulse is increasing having noticeable capacitor discharge trail. Pulse fall time can easily increase by 1 μs for load capacitance of 10 nF.

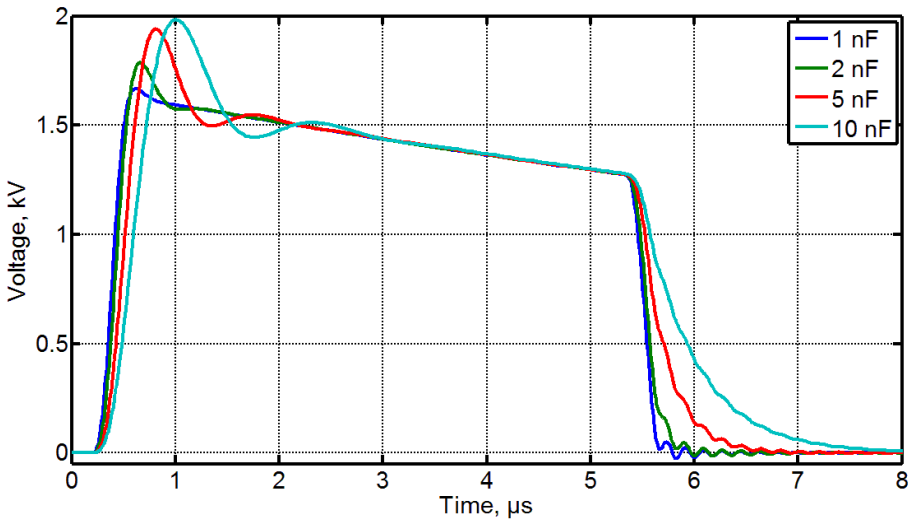

Figure 22. Pulsed voltage across the load with different load capacitance

2.4. Methods of pulse shape improvement

For transistor to turn off, residual charge carriers should not be left in the junction. They start to recombine after switching signal is turned off. However, recombination time may be too slow for fast switching applications. This not only increases switch off delay time but also creates a tail at pulse fall. It originates from a current which flows as charge carriers recombine. To reduce pulse fall time some external measures can be taken. Residual charge carriers can be swept out by applying external voltage on the junction. This voltage should be in opposite polarity to the switching signal. By applying this method fall time can be shortened.

Residual minority carriers in the IGBT transistor's drift region recombines at quite slow rate creating significant turn-off tail which must be managed in the electroporator. Modeled pulse with IGBTs turn-off tail is shown in **figure 23 a)**. Measurements of the pulse confirmed the existence of the turn-off tail (**b**)). Normalized pulses representing different resistance of the load are shown in that figure. The pulses were normalized because different voltage was applied on the load

in these measurements. However, pulse amplitude is not so important in these measurements because pulse shape is in interest here. It can be seen that higher resistance of the load results in longer pulse tail. It means that it is difficult to control pulse tail by implementing any measures in the pulse generation circuit if load is changing with every sample. What is more, resistance of the sample is usually unknown *a priori*.

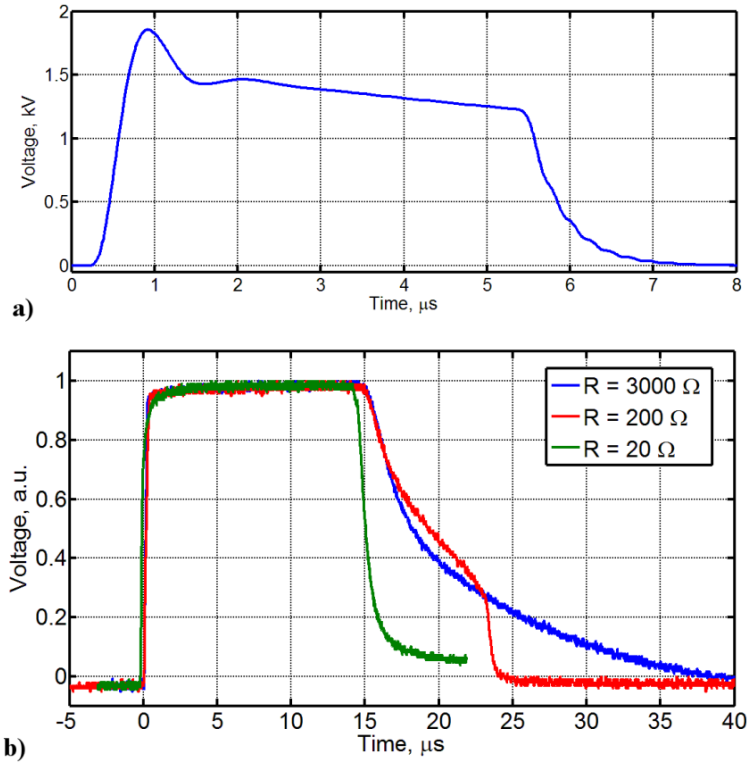

Figure 23. a) Modeled pulse having IGBT turn-off tail; b) Measured generator's pulses and their turn-off tail's dependence on the load resistance

Another reason that makes it difficult to manage turn-off tail is that minority carriers are difficult to sweep out by external means in IGBT. Other method should be used. Additional IGBT transistor is introduced into the circuit in the design of the generator. It is connected in parallel to the load. Its function is to bypass tail current of the switching IGBT so that it would not flow through the load. For that reason, this transistor would be referred as a bypass or shunt transistor. Bypass transistor is identical IGBT as the one used for switching. Scheme with bypass transistor used for modeling is shown in **figure 24**. Full snapshot of the *LTSpice* model of generator with bypass IGBT is present in **Appendix 2**.

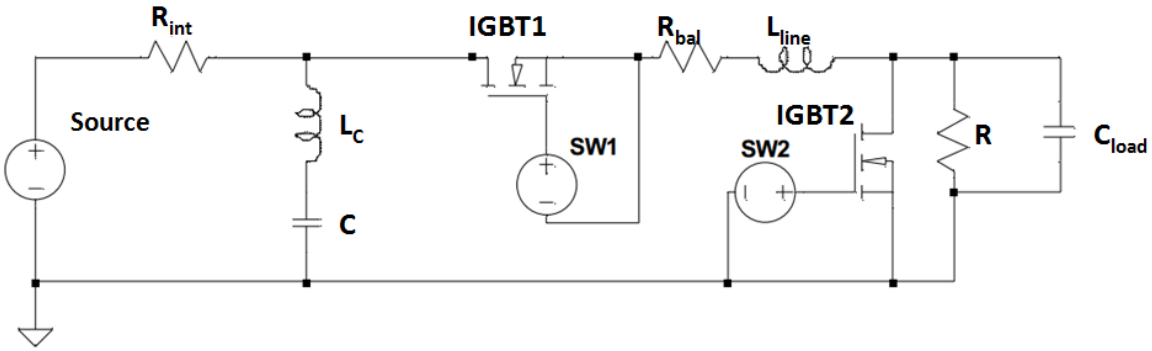

Figure 24. Circuit used for modeling high voltage pulse generator with bypass transistor

Bypass transistor switching signal is generated by controller. The same controller is used for both switch IGBT transistor and bypass IGBT. These two signals are synchronized so that a bypass transistor is opened at the time when pulse is about to finish. Switching signals for both IGBT transistors are shown in **figure 25**. Modeled pulses of the generator without and with the bypass transistor are also present in this figure. Clear cut-off of the pulse is seen at the time when bypass transistor is switched on. Modeling suggests that using bypass transistor is an appropriate method to be used to improve pulse shape at its fall.

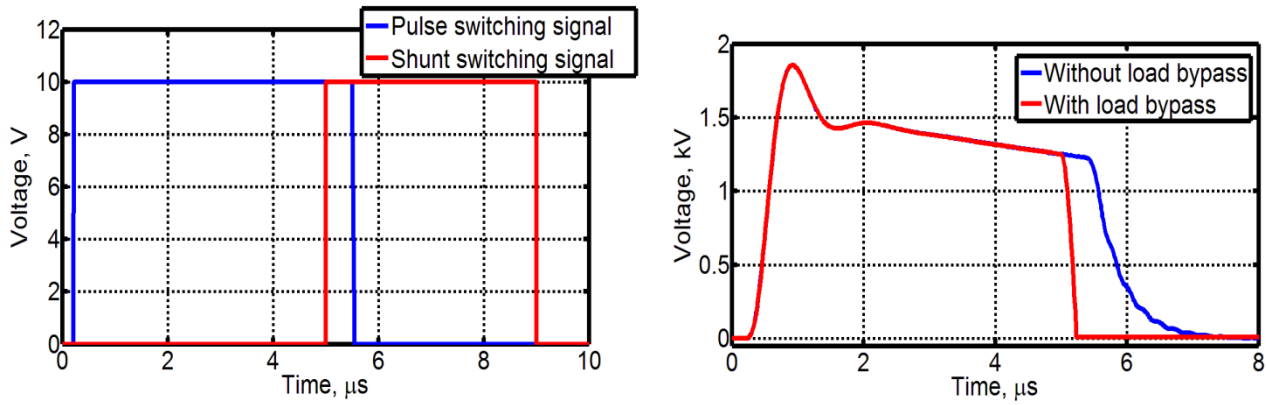

Figure 25. Modeling results of the generator with bypass IGBT transistor. a) Synchronized signals used for switching transistors; b) Comparison of two pulses generated without and with load bypass transistor

3. ANALYSIS OF CONSTRUCTED GENERATOR

3.1. Methods of pulse measurement

Principle scheme of the generator is shown in **figure 26.** Constructed generator for electroporation has two types of capacitors both of these having four capacitors. Connections available with these capacitors were already shown in **figure 13** while resulting capacitances and voltages were shown in **table 5**. Relay switching is used to commutate between capacitors and their different connections. Capacitors are then charged by voltage supply unit to predefined voltage level. IGBT controller generates switching signal of 3.5 V in magnitude and transfers this pulse to the base of transistor thus opening it and initiating formation of the output pulse on the load. Second IGBT is opened at the end of the pulse to bypass the current and eliminate the IGBT current tailing. Residual charge is discharged through additional resistor after the pulse. This allows safe commutation of capacitors to another desired configuration as well as contributing to electrical safety issues to the operator of the electroporator. However, residual energy discharge increases energy losses. Hence changeable capacitance proves to be efficient way of reducing losses because it allows to adjust capacitance. It should be as low as possible to reduce energy losses and charging time, but on the other hand, it should be high enough to guarantee that no noticeable voltage drop would occur during pulse.

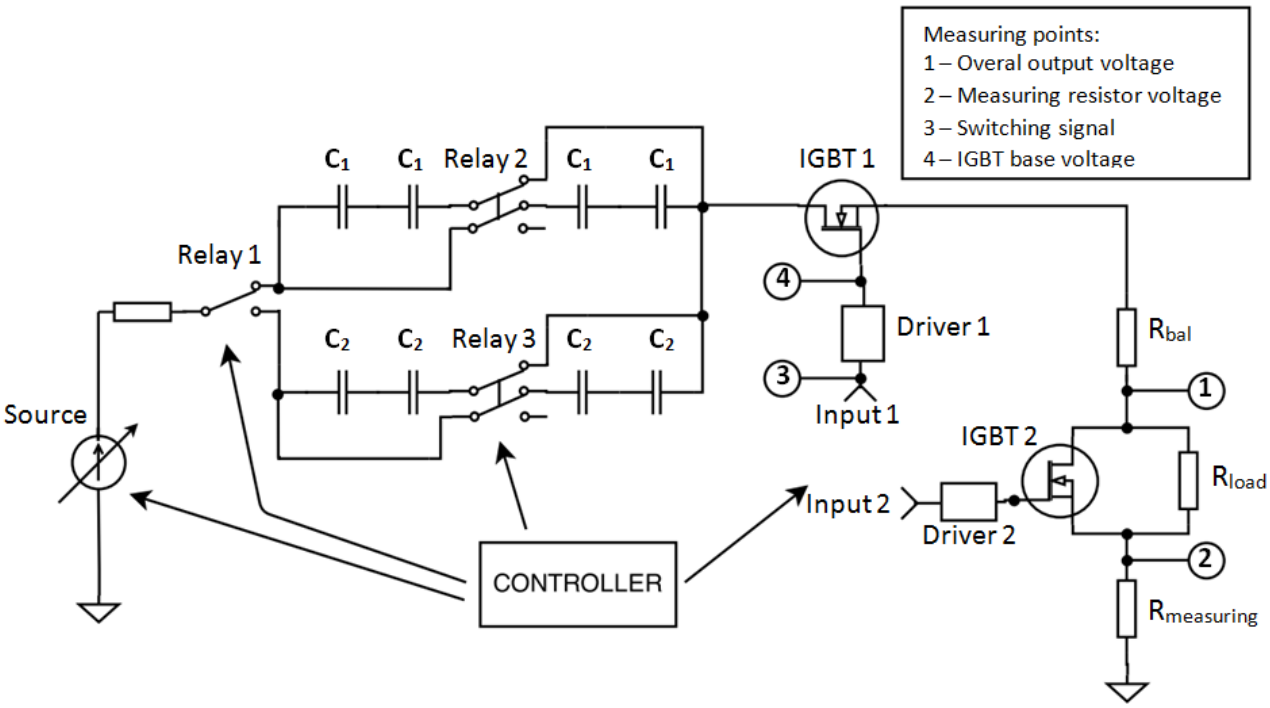

Figure 26. Principle scheme of the circuit of high voltage pulse generator

Measurements of a pulse on the sample could not be performed directly connecting cable from the sample to the channel of oscillograph. High voltage of the pulse would inevitably damage the measurement equipment. Generator output voltage is measured using additional resistor connected in series. This resistor is denoted as a measuring resistor in the following text. This resistor together with sample resistance acts as a voltage divider. By choosing small enough series resistance, appropriate voltage drop on the measuring resistor can be achieved. This signal is then safely passed to the measuring device. Resistance of the measuring resistor is known. If sample resistance is also known, measured voltage can be used to deduce a pulse voltage on the sample. For that, we use the fact that voltage divider is formed in the output of electroporator. Voltage on the sample is then:

$$U_L = U_M \frac{R_L}{R_M}, \qquad (6)$$

there U_L – voltage on the load, U_M – measured voltage, R_L – load (sample) resistance, R_M – resistance of the measuring resistor.

Another problem related to measuring the pulses is pulse shape distortion during transient processes. These make pulse front side and back side distorted. Measuring resistor may have some parasitic inductance. In this case, measuring resistance has some reactive component and such measuring system would acquire differentiating properties. Voltage overshoots is expected to form at the front and back of the pulse. The pulse measured on the measuring resistor would have a form similar to that, shown on **figure 27**. The height of the voltage spikes depends on the inductance in the measuring circuit. This can be explained having in mind the fact that inductive resistance is directly proportional to frequency of the current, hence to the rate of change of the current. At the start of the pulse current change is enough to create reactive resistance comparable to measuring resistance. As a result of that, more voltage drops on the measuring resistor during transient process.

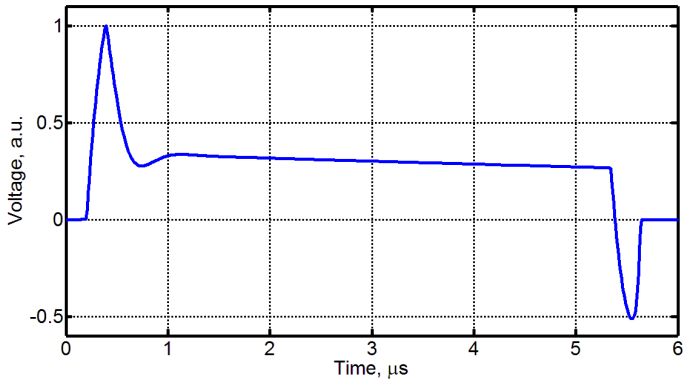

Figure 27. Pulse shape on the measuring resistor having parasitic inductance

In order to mitigate unwanted additional voltage drop on the measuring resistor, parallel connected capacitor is used. Measuring circuit at the output of the generator is shown in **figure 28**. Capacitor acts in the opposite way as an inductor. It has low reactive resistance to high current change thus compensating resistance increase due to inductance. Optimal capacitance is chosen to fully compensate the inductance. If the measuring conditions are changed, capacitance should also be adjusted to that.

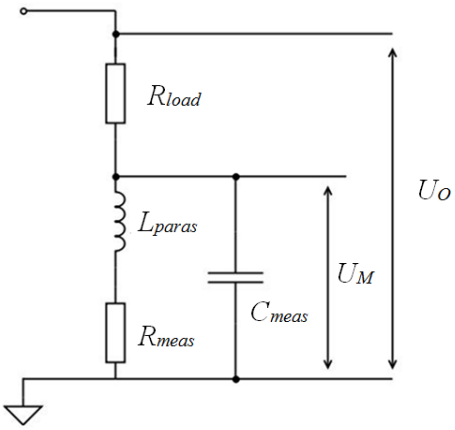

Figure 28. Scheme of the pulse measuring circuit at the output of the generator. R_{load} – load resistance, R_{meas} – measuring resistance, L_{meas} – parasitic inductance of the measuring circuit, C_{meas} – compensating measuring capacitance, U_M – measured voltage, U_O – total output voltage

3.2. Measurement and analysis of generator pulses

A series of measurements was performed using different values of parameters. Values of the parameters used in the measurements are shown in **table 10**.

Table 10. Information of generator pulse measurements

No.	Capacitor bank capacitance, µF	Capacitor voltage, V	Pulse length, µs	Load resistance, Ω	Figure
1.	250	55	3	1000	28 a)
2.	250	55	100	1000	28 b)
3.	13	55	100	1000	29 a)
4.	13	55	100	130	29 b)
5.	13	55	500	130	29 c)
6.	1000	55	500	130	29 d)
7.	250	55	5	860	30 a)
8.	250	100	5	860	30 b)
9.	250	400	5	860	30 c)
10.	250	800	5	860	30 d)

Different values of capacitances were used. They represent capacitor connections previously shown in **figure 13**. Capacitor bank was charged to voltage levels ranging from 55 V to 800 V. Pulse lengths were chosen to range from 3 μs to 500 μs. 3 μs is the shortest pulse possible for this electroporator. Load resistance was chosen in the range from 130 Ω to 1000 Ω. These values are higher than usual resistance values of working samples of cell suspension. However, for example, resistances up to several kilovolts are possible for yeast samples which is also a common cell material used for electroporation research.

Four voltages were measured during one pulse. Measuring points of these voltages are shown in the principle scheme of the generator in **figure 26**. The first one is overall output voltage which includes both load voltage and voltage on the measuring resistor. Overall voltage is shown in orange on the graphs provided bellow. The other measured value was voltage on the measuring resistor. This voltage is shown in purple on the graphs. IGBT switching signal was also measured. It is generated by controller and fed into the gate of the transistor. This signal is shown in blue on the graphs. Finally, IGBT base (gate) voltage was measured. It represents the current flowing through the IGBT. It is shown in green on the graphs. In order to measure overall output voltage, additional voltage divider was used at the connection to the oscillograph since maximum voltage of 10 V can be fed into the channel.

The first measurement shows the shortest pulse of the electroporator (**figure 29 a)**). Its duration is 3 μs, capacitor bank was charged up to 55 V. It can be seen that overall pulse voltage on the load has a value of approximately 55 V. Previously mentioned multiplier of a factor of 10 should be considered deducing overall voltage from the graph. Pulse shape from the measuring resistor (purple graph) differs from the overall output pulse. This shows the integrating behavior of the measuring circuit meaning that it has to high capacitance compared to the inductance, thus reactive resistance from the capacitance dominates over reactive resistance from the inductance. However, this measuring drawback is negligible when measuring pulses longer then few tens of microseconds. Improved adjustment should be done for short pulses measurements. Delay time is also seen in the graph. Pulse is formed in the output approximatelly 2 μs after the switching signal from the controller. This is much more then 0.2 – 0.3 μs visible in the previously modeled pulses. Finally, graph of base voltage of IGBT is distorted for such a short pulse showing complex transient process. It has clearer shape when pulses are longer then few tens of microseconds. Graphs shown in **figure 29 b)** shows 100 μs pulse. Both voltage on the measuring resistor and base voltage have distinct pulse shape and transient processes do not influence it as in short pulses.

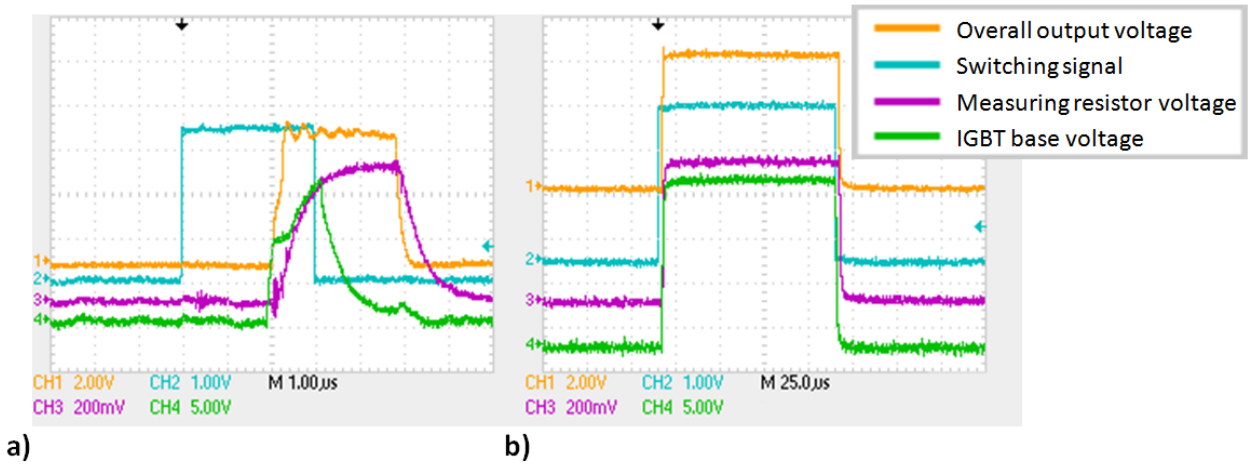

Figure 29. Pulses of different length measured when capacitance was set to 250 µF.
a) capacitor voltage – 55 V, pulse length – 3 µs, load resistance – 1000 Ω;
b) capacitor voltage – 55 V, pulse length – 100 µs, load resistance – 1000 Ω

It is also worth mentioning that no pulse tail is visible. Second IGBT transistor is opened at the end of the pulse and shunts the load. This generates pulses with greatly improved pulse fall characteristics compared to the pulses generated without bypass transistor (**figure 23 b)**).

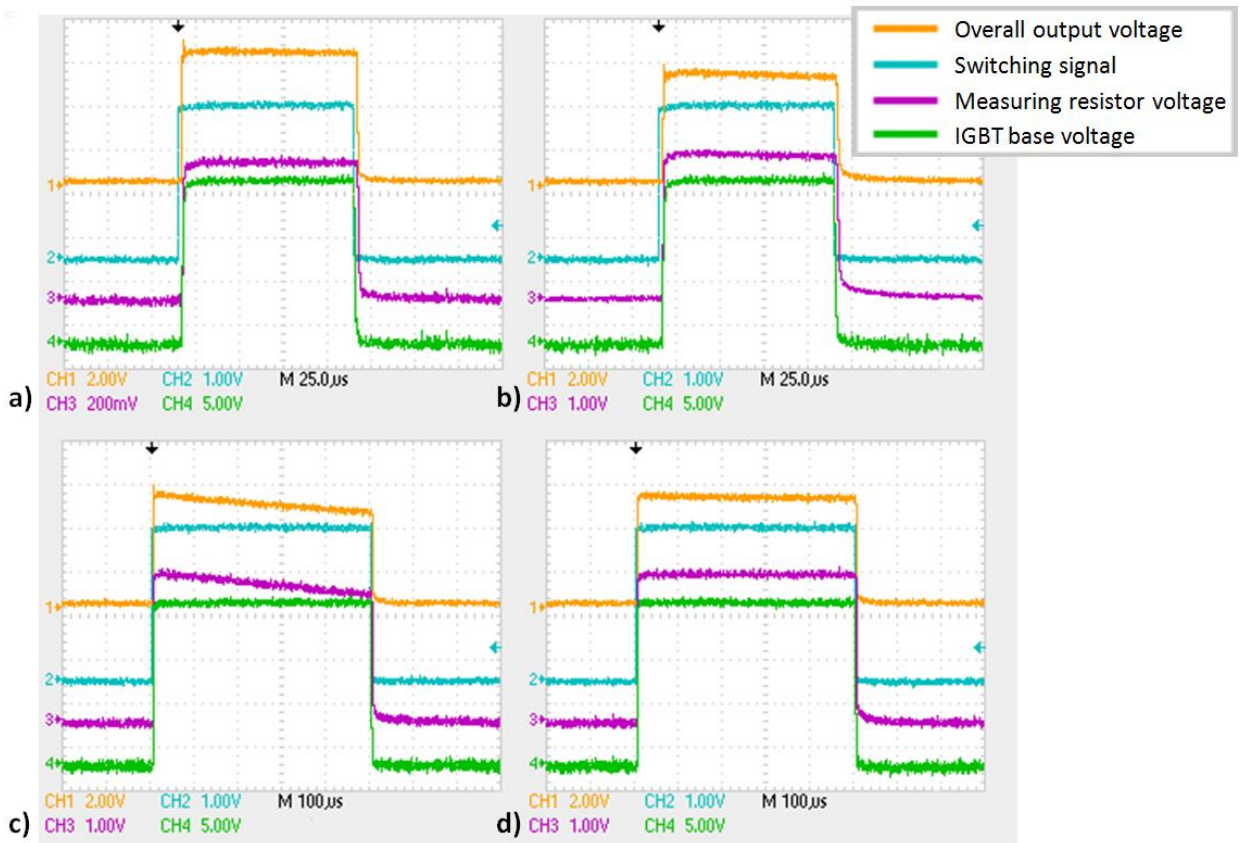

Figure 30. Pulses measured to observe dependence of the capacitor discharge time constant on the pulse shape when capacitors were charged to 55 V.
a) capacitance – 13 µF, pulse length – 100 µs, load resistance – 1000 Ω;
b) capacitance – 13 µF, pulse length – 100 µs, load resistance – 130 Ω;
c) capacitance – 13 µF, pulse length – 500 µs, load resistance – 130 Ω;
d) capacitance – 1000 µF, pulse length – 500 µs, load resistance – 130 Ω

In order to observe voltage drop due to capacitor charge decay during the pulse measurements 3 to 6 were made. Capacitance of the capacitor bank was reduced to 13 µs. However, no observable voltage drop is seen on the pulse in **figure 30 a)**. Despite that capacitance was chosen to be the smallest possible, the load resistance was high enough resulting in discharge time constant of *RC* = 13 ms. In order to decrease discharge time constant load resistance was reduced to 130 Ω. With time constant of approximately 1.7 ms, voltage drop during pulse is starting to be observable on the 100 µs pulse. 500 µs pulse shows clear voltage drop during the pulse (**c)**). However, increasing capacitance up to 1000 µF without changing other parameter values makes voltage drop negligible again (**d)**).

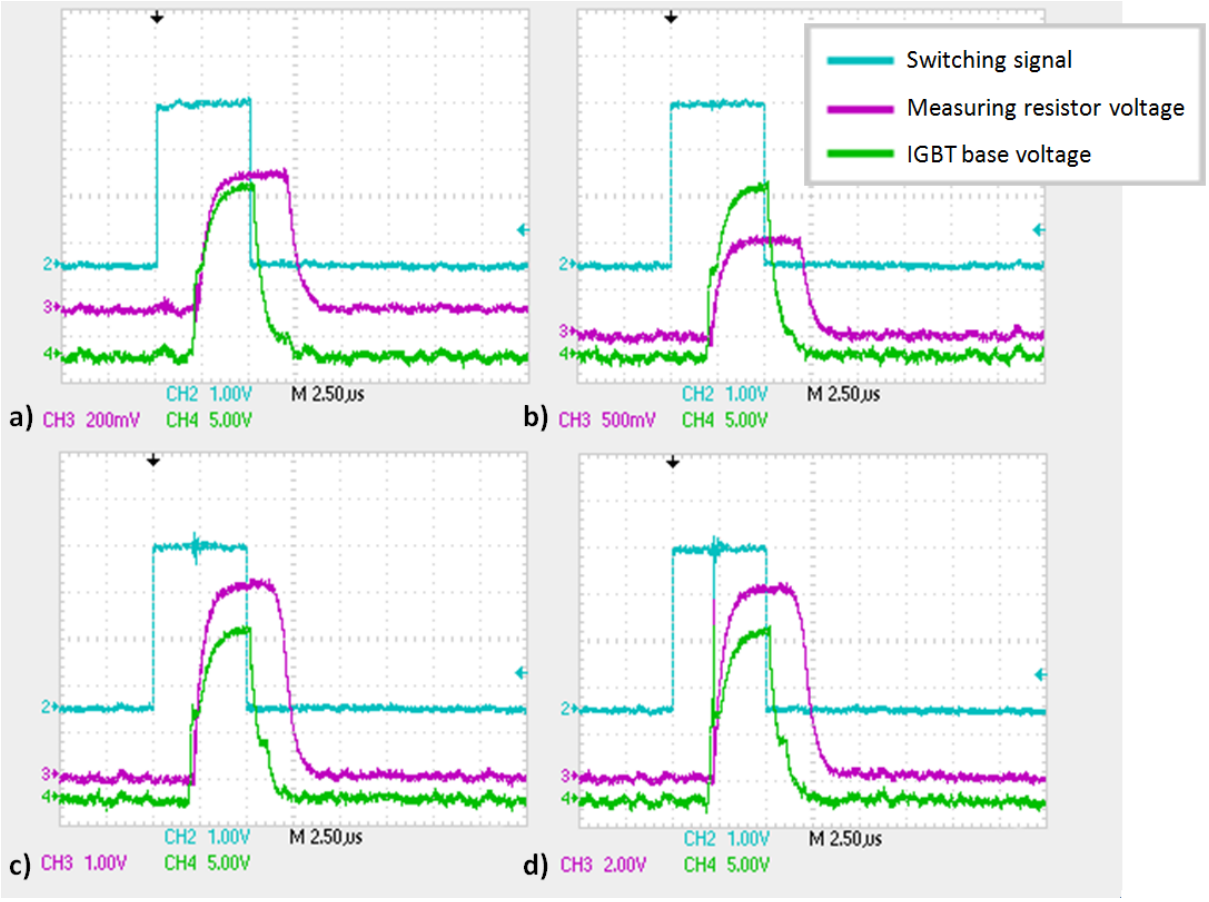

Figure 31. Pulses with different voltage of charged capacitor bank when load resistance was set to 860 Ω, capacitors capacitance was chosen to be 250 µF, pulse length was set to 5 µs. a) capacitor voltage – 55 V; b) capacitor voltage – 100 V; c) capacitor voltage – 400 V; d) capacitor voltage – 800 V

A group of measurements was made to observe pulse shape with increasingly higher capacitor charge voltage (measurements from 7 to 10). Constant capacitor bank capacitance was chosen to be 250 µF. Pulse length was also constant and set to 5 µs. Load resistance was increased to 860 Ω. Capacitors were charged from 55 V to 800 V during this series of measurements. Only voltage from the measuring resistor was measured this time. Measuring results are shown in the

graphs in **figure 31**. It can be seen that doubled capacitor voltage results in doubled voltage on the measuring resistor proving that the pulse voltage on the load also doubles. Measured pulse shape again shows integrating properties of the measuring circuit as it was previously described.

Measurements show that pulse rise time is less than 0.3 μs. What is more, pulse fall time is shortened to less than 0.3 μs as well. This is achieved using bypass transistor. Such a rise and fall times consists less than 10 % of total shortest available 3 μs pulse length and become negligible for longer pulses. Pulse delay is observable in the measured pulses. Delay time is 2 μs. It is long compared to shortest pulse time, yet insignificant for pulses up to 100 μs. However, pulse delay has no significant importance since both IGBT transistors are synchronized from single microcontroller.

It was observed that voltage on the measuring resistor differ from overal output voltage of the generator due to high capacitance in the measuring circuit. This should be dealt with when measuring pulses shorter than 10 μs by precisely adjusting capacitance in the measuring circuit. Failing to do that can lead to wrong interpretation of measuring results because they can be inaccurate.

By choosing appropriate capacitor connection and capacitance, voltage drop during a pulse time can be small enough to achieve square pulses for a desired pulse length as it can be seen from **figure 30**. What is more, square pulse shape is observed with different charge voltages of the capacitor. The objective to generate square wave pulses is achieved with chosen design and parameters of the pulse generator.

Measured pulses show that no significant transient process occurs when switch is turn on. On the other hand, modeling shows that voltage overshoot usually occurs at switch-on. One of the reasons could be that IGBT transistor model created as a part of generator modeling was not as accurate as it was expected. Further improvement of the IGBT model should be done in order to have more accurate modeling of the generator itself.

CONCLUSIONS

1. The most common method used for high voltage pulse generation in many of the commercially available electroporators is the capacitor discharge. Depending on the applications, the pulse is either exponentially decaying or square wave. Literature review revealed that square wave pulses are preferable in scientific electroporation research. Commercial electroporators are usually designed for some specific applications, have narrow range of parameters, come with predefined usage protocol and lack capabilities of pulse shape control.

2. Semiconductor transistors are suitable for switching in pulse generators with pulses up to few kilovolts. Researches show that IGBT transistors have higher voltage and current ratings, better conduction characteristics than MOSFETs. Recent developments improved switching time of IGBTs. For generating the pulses up to 4 kV and pulse lengths from 3 μs to 10 ms, IGBTs are the most suited switches.

3. Digital model of IGBT transistor (IXEL40N400) that is used in generator was created in *LTSpice* environment. Switching parameters of the transistor model corresponds to real IGBT parameters of switch-on and switch-off delay times, pulse rise and fall times.

4. Digital model of the generator was created. Modeling of the pulse generator allows prediction of the pulse shape dependence on the generator circuit parameters. Both, load capacitance and line inductance have effect on voltage overshoot at turn-on while turn-off time is directly proportional to load capacitance.

5. In order to avoid IGBT current tail at turn-off, second IGBT switch can be used. It allows to bypass excess current from the load at turn-off and cuts off the tail. Pulse fall time is shortened to 0.3 μs independently from the load resistance.

6. Pulse measurements of the constructed generator prototype showed that pulse shape corresponds to a square wave pulse. Both pulse rise and fall times do not exceed 0.3 μs for amplitudes up to 4 kV. However, pulses shorter than 10 μs reveal distorted pulse shape across the measuring resistor. This is a result of measuring circuit that measures voltage using voltage divider instead of measuring directly on the load. Precise tuning of the capacitance in the measuring circuit is important to compensate for inductance in the measuring circuit. Too high capacitance results in integrating behavior of measuring circuit as it was seen in the measuring results.

REFERENCES

1. Aly R.E., Joshi R.P. et al. The effect of multiple, microsecond electrical pulses on bacteria. At *Proc. IEEE Pulsed Power Plasma Science Conf.* 2001.

2. Balevičius, S., Stankevič, V. et al. System for the nanoporation of biological cells based on an optically-triggered high-voltage spark-gap switch. *IEEE Transactions on Plasma Science*, vol. 41, no. 10, pp. 2706–2711, 2013.

3. Bertacchini, C., Margotti, P.M. et al. Design of an irreversible electroporation system for clinical use. *Technology in Cancer Research and Treatment*, vol. 6, no. 4, pp. 313-320, 2007.

4. Ching, C. T-S., Sun, T-P. et al. A circuit design of a low-cost, portable and programmable electroporation device for biomedical applications. *Sensors and Actuators*, 166–167, pp. 292–300, 2012.

5. Danfelter, M., Engstrom, P., Persson, B.R.R. et al. Effect of high voltage pulses on survival of Chinese hamster V79 lung fibroblast cells. *Bioelectrochemistry and Bioenergetics*, vol. 47, no. 1, pp. 97-101, 1998.

6. Dodge, J.P.E., Hess, J. IGBT Tutorial. Application note from Advanced Power Technology Inc., 2001. Internet access: *http://www.ohm.com.tr/doc/Microsemi---IGBT-Tutorial.pdf*

7. Dougal, R. A. and Williams, P. F. Fundamental processes in laser triggered electrical breakdown of gases. *J. Phys. D, Appl. Phys.*, vol. 17, no. 5, pp. 903–918, 1984.

8. International Rectifier Company. IGBT Characteristics. Application Note AN-983, 2012. Internet access: *http://www.irf.com/technical-info/appnotes/an-983.pdf*

9. Frey, W., Sack, M. et al. Gas-insulated self-breakdown spark gaps: Aspects on low-scattering and long-lifetime switching. *Acta Phys. Polonica Ser. A*, vol. 115, no. 6, pp. 1016–1018, 2009.

10. Gehl, J., Electroporation: theory and methods, perspectives for drug delivery, gene therapy and research. A review. *Acta Physiol Scand*, 177, pp. 437–447, 2003.

11. Hickman, B., Cook, E. Evaluation of MOSFETs and IGBTs for pulsed power applications. At *Proc. IEEE Pulsed Power Plasma Science Conf*., 2002.

12. Kinosita, K. and Tsong, T.Y. Voltage - induced pore formation and hemolysis of human erythrocytes. *Biochim Biophys Acta,* 471, pp. 227–242, 1977.

13. Mir, L.M., Gehl, J., Sersa, G. et al. Standard operating procedures of the electrochemotherapy: Instructions for the use of bleomycin or cisplatin administered either systemically or locally and electric pulses delivered by the Cliniporator (TM) by means of invasive or non-invasive electrodes. *Ejc. Supplements*, vol. 4, no. 11, pp. 14-25, 2006.

14. Mir, L.M. Nucleic acids electrotransfer-based gene therapy (Electrogenetherapy): Past, current and Future. *Molecular Biotechnology*, vol. 43, no. 2, pp. 167-176, 2009.

15. Mouneimne, Y., Tosi, P.F., Gazitt, Y., Nicolau, C. Electro-insertion of xeno-glycophorin into the red blood cell membrane. *Biochem Biophys Res Commun,* 159(1): pp. 34–40, 1989.

16. Neumann, E. and Rosenhec, K. Permeability changes induced by electric impulses in vesicular membranes. *Journal of Membrane Biology*, vol. 10, no. 3-4, pp. 279-290, 1972.

17. Neumann, E., Schaefer-Ridder, M., Wang, Y., Hofschneider, P.H. Gene transfer into mouse lyoma cells by electroporation in high electric fields. *EMBO J,* 1, pp. 841–845, 1982.

18. Pavlin, M., Kanduser, M., Rebersek, M. et al. Effect of cell electroporation on the conductivity of a cell suspension. *Biophysical Journal*, vol. 88, no. 6, pp. 4378-4390, 2005.

19. Rebersek, M., Miklavcic, D. Concepts of electroporation pulse generation and overview of electric pulse generators for cell and tissue electroporation. *Advanced Electroporation Techniques in Biology and Medicine,* A. G. Pakhomov, D. Miklavcic and M. S. Markov, eds., pp. 323-339: CRC, Boca Raton, USA, 2010.

20. Reberšek, M., Miklavcic, D. Advantages and Disadvantages of Different Concepts of Electroporation Pulse Generation. *Automatika*, vol. 52 no. 1, pp. 12–19, 2011.

21. Rodamporn, S., Beeby, S.P. et al. Design and construction of a programmable electroporation system for biological applications. At *The 1st Symposium Thai Biomedical Engineering*, 18-19, pp. 234-238, 2007.

22. Teissie, J. and Rols, M.P. An experimental evaluation of the critical potential difference inducing cell membrane electropermeabilization. *Biophys J*, 65, pp. 409–413, 1993.

23. Teissie, J., Eynard, N., Vernhes, M.C., Benichou, A., Ganeva, V., Galutzov, B., Cabanes, P.A. Recent biotechnological developments of electropulsation. A prospective review. *Bioelectrochemistry*, 55: pp. 107–112, 2002.

24. Weaver, J.C. and Chizmadzhev, Y.A. Theory of electroporation: A review. *Bioelectrochem. Bioenerg.* 41: pp. 135-160, 1996.

25. Zimmermann, U. Electric field-mediated fusion and related electrical phenomena. *Biochim Biophys Acta*, 694(3): pp. 227–277, 1982.

APPENDIXES

Appendix 1

LTSpice model snapshot of the high voltage pulse generator for electroporation purposes.

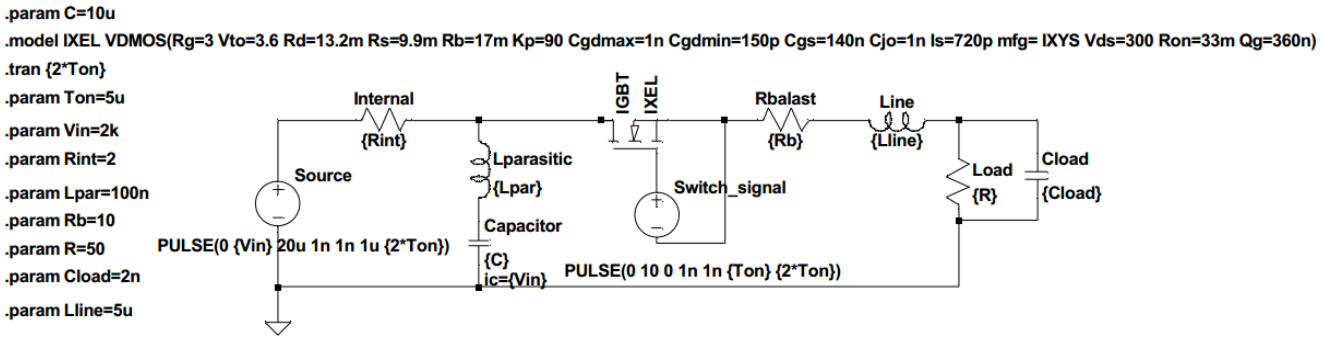

Appendix 2
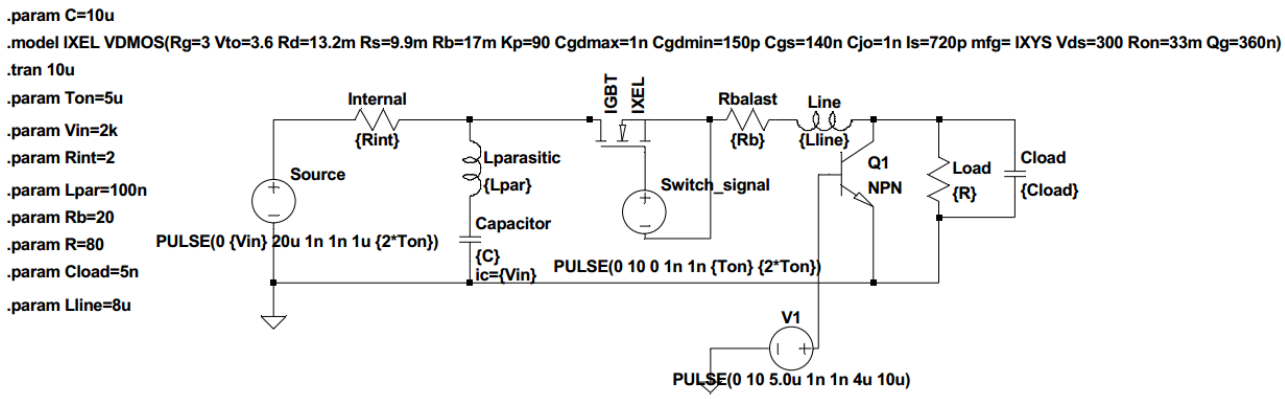
LTSpice model snapshot of the high voltage pulse generator with bypass IGBT transistor for electroporation purposes.