VILNIUS GEDIMINAS TECHNICAL UNIVERSITY

Sigitas Juraitis

RESEARCH OF TRANSIENT PROCESSES IN ELECTROMECHANICAL TWO-MASS SYSTEM

SUMMARY OF DOCTORAL DISSERTATION

TECHNOLOGICAL SCIENCES,
ELECTRICAL AND ELECTRONIC ENGINEERING (01T)

VGTU
LEIDYKLA
Vilnius TECHNIKA 2012

Doctoral dissertation was prepared at Vilnius Gediminas Technical University in 2008–2012.

Scientific Supervisor

Prof Dr Habil Roma RINKEVIČIENĖ (Vilnius Gediminas Technical University, Technological Sciences, Electrical and Electronic Engineering – 01T).

The dissertation is being defended at the Council of Scientific Field of Electrical and Electronic Engineering at Vilnius Gediminas Technical University:

Chairman

Prof Dr Habil Romanas MARTAVIČIUS (Vilnius Gediminas Technical University, Technological Sciences, Electrical and Electronic Engineering – 01T).

Members:

Prof Dr Algirdas BAŠKYS (Vilnius Gediminas Technical University, Technological Sciences, Electrical and Electronic Engineering – 01T),

Prof Dr Habil Vilius Antanas GELEŽEVIČIUS (Kaunas University of Technology, Technological Sciences, Electrical and Electronic Engineering – 01T),

Assoc Prof Dr Olga KURASOVA (Vilnius University, Technological Sciences, Informatics Engineering – 07T),

Prof Dr Dalius NAVAKAUSKAS (Vilnius Gediminas Technical University, Technological Sciences, Electrical and Electronic Engineering – 01T).

Opponents:

Prof Dr Habil Steponas GEČYS (Kaunas University of Technology, Technological Sciences, Electrical and Electronic Engineering – 01T),

Prof Dr Jurij NOVICKIJ (Vilnius Gediminas Technical University, Technological Sciences, Electrical and Electronic Engineering – 01T).

The dissertation will be defended at the public meeting of the Council of Scientific Field of Electrical and Electronic Engineering in the Senate Hall of Vilnius Gediminas Technical University at 2 p. m. on 11 June 2012.

Address: Saulėtekio al. 11, LT-10223 Vilnius, Lithuania.
Tel.: +370 5 274 4952, +370 5 274 4956; fax +370 5 270 0112;
e-mail: doktor@vgtu.lt

The summary of the doctoral dissertation was distributed on 10 May 2012.

A copy of the doctoral dissertation is available for review at the Library of Vilnius Gediminas Technical University (Saulėtekio al. 14, LT-10223 Vilnius, Lithuania).

© Sigitas Juraitis, 2012

VILNIAUS GEDIMINO TECHNIKOS UNIVERSITETAS

Sigitas JURAITIS

DVIMASĖS ELEKTROMECHANINĖS SISTEMOS PEREINAMŲJŲ VYKSMŲ TYRIMAS

DAKTARO DISERTACIJOS SANTRAUKA

TECHNOLOGIJOS MOKSLAI,
ELEKTROS IR ELEKTRONIKOS INŽINERIJA (01T)

VGTU LEIDYKLA TECHNIKA
Vilnius 2012

Disertacija rengta 2008–2012 metais Vilniaus Gedimino technikos universitete.
Mokslinis vadovas

prof. habil. dr. Roma RINKEVIČIENĖ (Vilniaus Gedimino technikos universitetas, technologijos mokslai, elektros ir elektronikos inžinerija – 01T).

Disertacija ginama Vilniaus Gedimino technikos universiteto Elektros ir elektronikos inžinerijos mokslo krypties taryboje:

Pirmininkas

prof. habil. dr. Romanas MARTAVIČIUS (Vilniaus Gedimino technikos universitetas, technologijos mokslai, elektros ir elektronikos inžinerija – 01T).

Nariai:

prof. dr. Algirdas BAŠKYS (Vilniaus Gedimino technikos universitetas, technologijos mokslai, elektros ir elektronikos inžinerija – 01T),

prof. habil. dr. Vilius Antanas GELEŽEVIČIUS (Kauno technologijos universitetas, technologijos mokslai, elektros ir elektronikos inžinerija – 01T),

doc. dr. Olga KURASOVA (Vilniaus universitetas, technologijos mokslai, informatikos inžinerija – 07T),

prof. dr. Dalius NAVAKAUSKAS (Vilniaus Gedimino technikos universitetas, technologijos mokslai, elektros ir elektronikos inžinerija – 01T).

Oponentai:

prof. habil. dr. Steponas GEČYS (Kauno technologijos universitetas, technologijos mokslai, elektros ir elektronikos inžinerija – 01T),

prof. dr. Jurij NOVICKIJ (Vilniaus Gedimino technikos universitetas, technologijos mokslai, elektros ir elektronikos inžinerija – 01T).

Disertacija bus ginama viešame Elektros ir elektronikos inžinerijos mokslo krypties tarybos posėdyje 2012 m. birželio 11 d. 14 val. Vilniaus Gedimino technikos universiteto senato posėdžių salėje.

Adresas: Saulėtekio al. 11, LT-10223 Vilnius, Lietuva.
Tel.: (8 5) 274 4952, (8 5) 274 4956; faksas (8 5) 270 0112;
el. paštas doktor@vgtu.lt

Disertacijos santrauka išsiuntinėta 2012 m. gegužės 10 d.

Disertaciją galima peržiūrėti Vilniaus Gedimino technikos universiteto bibliotekoje (Saulėtekio al. 14, LT-10223 Vilnius, Lietuva).

VGTU leidyklos „Technika“ 2013-M mokslo literatūros knyga.

© Sigitas Juraitis, 2012

Introduction

Topicality of the problem. Electromechanical system includes various mechanical chains, with infinite or finite elasticity and clearance. Systems with infinite stiffness and without clearance are qualified as one-mass system and are quite well analyzed. Systems with capable to deform chains are more complex. They are described by high order nonlinear differential equations, and without essential simplifying of problem they cannot be solved in analytical way. In these cases computer models of pending problem must be developed, using specialized software, and system responses simulated.

Research object is imitational and experimental transient processes in controlled electromechanical two-mass system.

Aim of the work – to research transient processes and to compare obtained simulation results with the experimental ones of created simulation models of two-mass electromechanical system with induction motor, controlled by vector control and fuzzy logic methods.

Tasks of the work

1. Develop a simulation model of elastic two-mass electromechanical system with clearance.
2. Develop a simulation model of two-mass electromechanical system with induction motor.
3. Create a simulation model of two-mass electromechanical system with vector control.
4. Create a simulation model of two-mass electromechanical system with Fuzzy logic controller.
5. Develop an experimental stand of two-mass electromechanical system with induction motor. Create a speed measuring device for investigation of dynamic responses of electromechanical system. Perform analysis of obtained experimental results and verify the adequacy of simulation models.

Methodology of research includes analytical, digital, experimental investigation and Fuzzy logic methods as well as object-oriented computer models and simulation. Simulation models are developed in *Matlab*® *Simulink*®software. Experimental studies are carried out with constructed model at Automation department of Electronics faculty Vilnius Gediminas Technical University.

Scientific novelty. The following research results were obtained, that are relevant in the area of electrical engineering and electronics:

1. New simulation models of two-mass electromechanical systems with elasticity and clearance of mechanical part are elaborated, enabling to research transients of two-mass system.
2. New simulation model of two-mass electromechanical systems with vector control of induction motor is developed, allowing analysis of dynamic processes in the system, evaluation of the transient responses of the first and the second mass angular speed and torque and their dependence from the load torque.
3. New simulation model of two-mass electromechanical systems with Fuzzy logic controlled induction motor is developed, allowing investigate the angular speed and torque transient responses of the first and the second masses, their dependence from the parameters of electromechanical system and load.

Practical value. The obtained research results can be used to design of two-mass electromechanical systems, to define influence of the second mass, elastic coupling, potential clearance, and load and allow choosing the optimal transient specifications of the system. The research results can be used for design of automatic control system, choosing of control method, choosing of control laws and parameters of controllers. Models can be easily improved, adapted, modified for using of different units at developing of two-mass electromechanical systems. Speed measuring device is constructed on the base of counting of generated pulses per time unit of standard torque sensor and have linear dependence of speed and pulse frequency. Designed equipment is planned to use in Vilnius Gediminas technical university, department of Automation for educational programs workshops.

Defended propositions

1. Developed simulation models of controlled elastic two-mass electromechanical systems with clearance allow investigating the dynamic processes at changing the system parameters and load.
2. Developed simulation models of two-mass electromechanical systems with vector control of induction motor allow reducing the speed and torque oscillations, reducing up to four times the maximum motor transient torque, up to five times the settling time and the steady state speed error.
3. Developed simulation models of two-mass electromechanical systems with Fuzzy logic controller allow reducing the maximum transient torque by 40 %, the settling time up to two times, the steady state speed error and stabilize the speed of the second mass; in the system with a high elasticity allows

reducing the amplitude of oscillation of torque transient responses up to 2,5 times.

The scope of scientific work. The dissertation is written in Lithuanian. The dissertation layout consists of four main chapters, list of references and list of author‘s publications on the subject of dissertation. The work covers 141 pages, 85 figures, 6 tables, 135 numbered formulas and 87 bibliographic sources.

1. Single-mass and Elastic Two-mass Systems

The two-mass mechanical system is described using reduced moment of inertia J_1 of induction motor rotor, reduced moment of inertia J_2 connected to the elements of actuator mechanism. Elastic connection between the masses is characterized by referred equivalent stiffness C_{12}, load torque of motor shaft T_{st1} and resistance torque of mechanism T_{st2}. Scheme of two-mass mechanical part with kinematics clearance is shown in Fig. 1a. Due to air gap dependence $T_{12} = f(\Delta\varphi)$ is non-linear, as shown in Fig. 1b.

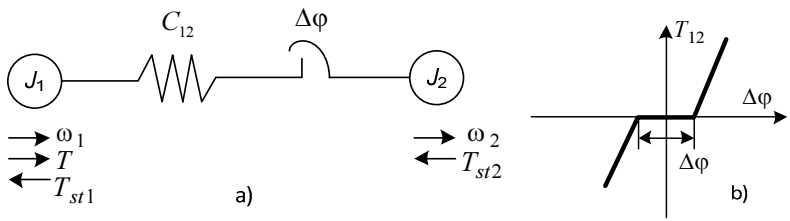

Fig. 1. Two-mass electromechanical system: a – diagram of mechanical part with clearance; b – dependence of clearance $T_{12} = f(\Delta\varphi)$

The mathematical model of this system can be described by equations as:

$$\begin{cases} T - T_{12} - T_{st1} = J_1 s\omega_1; \\ T_{12} - T_{st2} = J_2 s\omega_2; \\ T_{12} = C_{12}\left(\varphi_1 - \varphi_2 - \dfrac{\Delta\varphi}{2}\right), \quad \text{when} \quad |\varphi_1 - \varphi_2| \rhd \dfrac{\Delta\varphi}{2}; \\ T_{12} = 0 \quad \text{when} \quad |\varphi_1 - \varphi_2| \le \dfrac{\Delta\varphi}{2}. \end{cases} \tag{1}$$

The equations show, that, while the clearance presents, both masses of the

system are moving independently of each other. According to the set of equations (1), the block diagram of mechanical part is composed, as shown in Fig. 2.

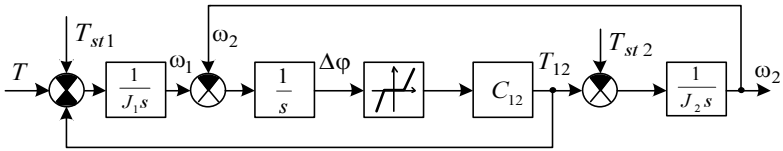

Fig. 2. Block diagram of system mechanical part with clearance

The induction motor in the stator reference frame is described by the basic differential equations as:

$$\begin{cases} \frac{\mathrm{d}}{\mathrm{d}t}\Psi_{qs}^{s} = u_{qs}^{s} - R_s\left(\frac{1}{L_s} + \frac{L_m^2}{\left(L_r L_s - L_m^2\right)L_s}\right)\cdot\Psi_{qs}^{s} + \frac{R_s L_m}{\left(L_r L_s - L_m^2\right)}\Psi_{qr}^{s}; \\ \frac{\mathrm{d}}{\mathrm{d}t}\Psi_{ds}^{s} = u_{ds}^{s} - R_s\left(\frac{1}{L_s} + \frac{L_m^2}{\left(L_r L_s - L_m^2\right)L_s}\right)\cdot\Psi_{ds}^{s} + \frac{R_s L_m}{\left(L_r L_s - L_m^2\right)}\Psi_{dr}^{s}; \\ \frac{\mathrm{d}}{\mathrm{d}t}\Psi_{qr}^{s} = -\frac{R_r L_s \Psi_{qr}^{s}}{L_r L_s - L_m^2} + \frac{R_r L_m}{L_r L_s - L_m^2}\Psi_{qs}^{s} - \omega\Psi_{dr}^{s}; \\ \frac{\mathrm{d}}{\mathrm{d}t}\Psi_{dr}^{s} = -\frac{R_r L_s \Psi_{dr}^{s}}{L_r L_s - L_m^2} + \frac{R_r L_m}{L_r L_s - L_m^2}\Psi_{ds}^{s} + \omega\Psi_{qr}^{s}. \end{cases} \tag{2}$$

The developed electromagnetic torque of the induction motor is calculated as this:

$$T_e = \frac{pL_m}{L_s L_r - L_m^2}\cdot\left(\Psi_{qs}^{s}\Psi_{dr}^{s} - \Psi_{ds}^{s}\Psi_{qr}^{s}\right). \tag{3}$$

Equations (2) and (3) are used to develop induction motor model in the stator reference frame.

In the literature are described mathematical models of single and two-mass electromechanical systems, the principle of mass transformation, analyzed effect of elasticity and clearance of two-mass systems at steady state, but dynamic processes in two-mass systems are not enough researched. Two-mass system with induction motor, in the application with the stator flux vector control method and Fuzzy logic, is not sufficiently researched.

2. Simulation Models of Controlled Induction Motors

The simulation models of induction motor are composed by using computer software *Matlab*® *Simulink*®. The simulation models are elaborated in different reference frames. The induction motor is chosen freely. The main parameters of motor are presented in Table 1.

Table 1. Parameters of simulated motor

Parameter	Value	Parameter	Value
Phase voltage, V	230	Resistance of stator winding, Ω	2.56
Motor power, kW	1.1	Leakage inductance of stator winding, mH	4.8
Rated current, A	3.56		
Rated speed, rad/s	157	Resistance of rotor winding, Ω	1.43
Rated torque, N·m	7.0	Leakage inductance of rotor winding, mH	4.97
Number of pole pairs	2		
Power factor	0.81	Mutual inductance of stator and rotor winding, mH	150
Inertia, kg·m^2	0.00262		

According to the set of equations (2) and (3), parameters of motor presented in Table 1, the simulation model of induction motor is composed. The model of induction single-mass induction drive, presented in Fig. 3, is developed in *Matlab*® *Simulink*® in stator reference frame.

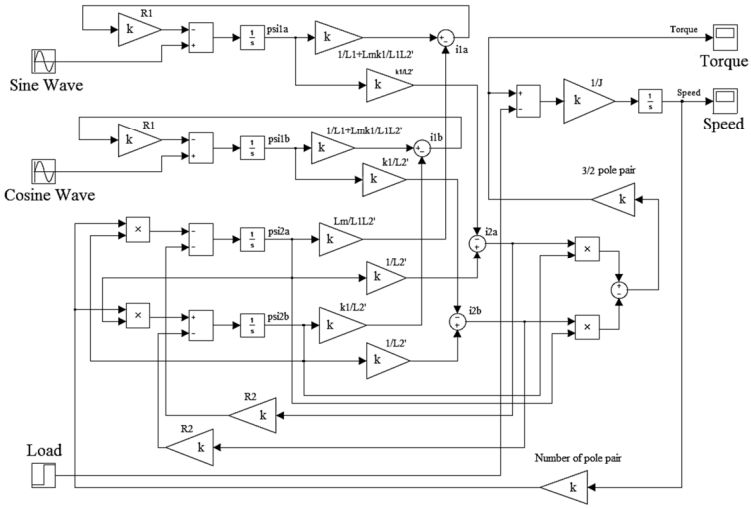

Fig. 3. Simulink® model of induction drive in the stator reference frame

The model can be easily changed or modified and adapted for solving of complex problems. This model is ideal to investigate elastic two-mass system with clearance, as well as system with vector control with PI controller.

The vector control of induction motor allows keeping stable reference speed at load change. The simulation model of vector control of two-mass system is elaborated. The model of inverter is simplified and presented without the power conversion control circuit. Stator currents and motor shaft speed are used as informational source in the vector control system. In the elaborated model required speed value is maintained by vector control with PI controller. The general model of control system is presented in Fig. 4.

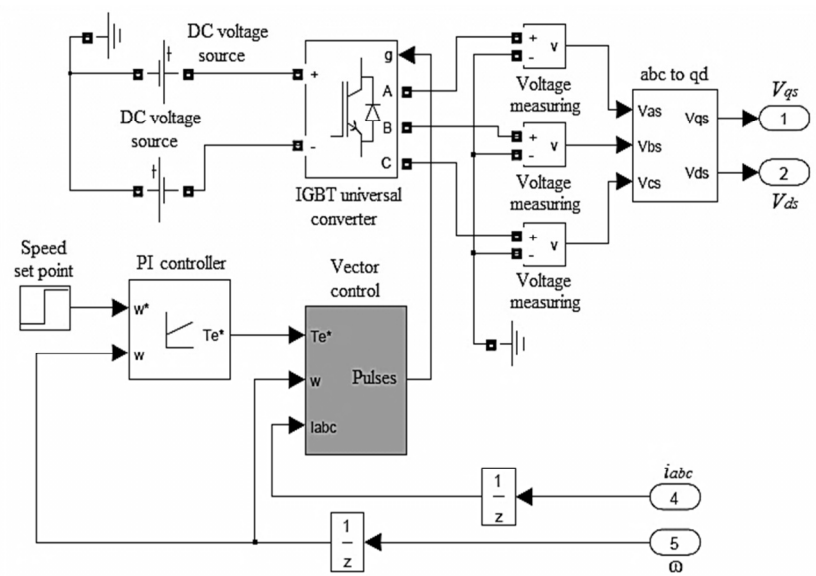

Fig. 4. Model of speed control system with vector control

The model of speed control system consists of a PI controller, vector control model, the voltage source, IGBT inverter and voltage measurement blocks. Induction motor is supplied by the inverter. Induction motor speed is compared with the reference speed ω* and the speed error, speed controller creates a signal T*e for the vector control model.

The model of motor in a synchronous reference frame and the model of Fuzzy logic controller are composed similarly.

3. Simulation Models and Dynamic Transient Processes

The part of two-mass system with kinematic clearance is shown in Fig. 5. The first mass is induction motor, which is described by nonlinear differential equations. The second mass is chosen freely. Let it will be cylindrical shape body, fastened along mass center

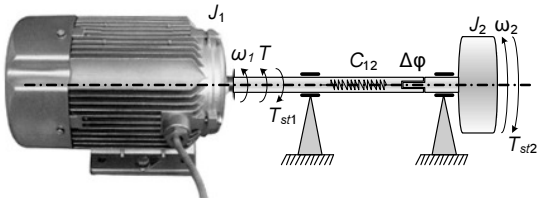

Fig. 5. View of two-mass system with clearance

Model of induction motor in a stator reference frame with two-mass system is presented before. The general simplified form of model is presented in Fig. 6. The model consists of these main parts: induction motor, second mass and scope.

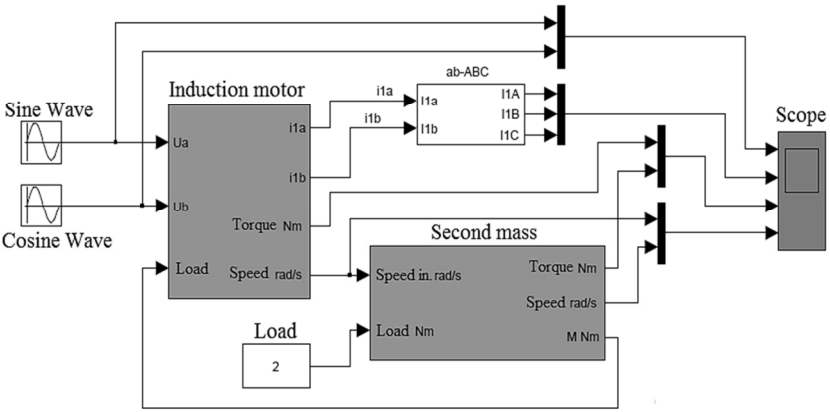

Fig. 6. Model of two-mass electromechanical system

Simulation results are presented in Fig. 7. That allows comparing speed response of motor, starting at no load, with absence of stiffness, with stiffness and with stiffness and clearance. Graphs show, that motor speed at load in the

system with elasticity lags the speed of motor starting at no-load due to torque produced by second mass. The third curve in Fig. 7 indicates the speed of the system with stiffness and clearance being the same at motor starting at no load in the beginning of the starting transients.

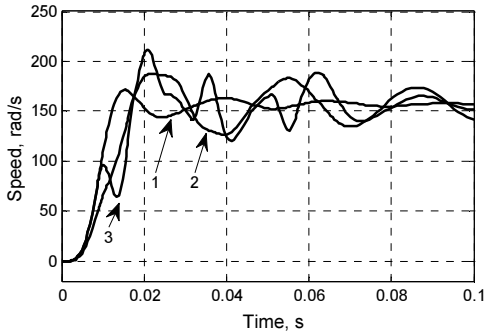

Fig. 7. Speed responses of induction motor at different load: 1 – without load; 2 – with second mass and elasticity of coupling; 3 – with second mass and elasticity and clearance of coupling

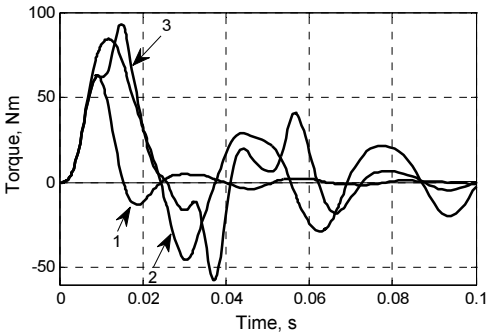

Fig. 8. Torque responses of induction motor at different load: 1 – without load; 2 – with second mass and elasticity of coupling; 3 – with second mass and elasticity and clearance of coupling

Fig. 8 presents response of torque, delivered by the motor, at different operating conditions: shaft with elasticity, with elasticity and clearance and no-loaded motor. The transient responses, when the clearance and elasticity is included, show that the maximum torque reaches greater value than at no-load,

i. e. 35 % when only elasticity is included and 50 % and when the elasticity and clearance is evaluated.

Using the above presented speed control model with vector control, two-mass electromechanical system model with vector control method are created. The model of vector controlled two-mass system is presented in Fig. 9. General system has the speed and load reference blocks, which values will be changed. Speed control is realized by forming control impulses for IGBT inverter, which forms the power supply voltage pulses. Used control method requires a sufficiently rigidity of coupling, therefore large coefficient of elasticity of the shaft is chose, which is equal to $1 \cdot 10^5$ N·m/rad.

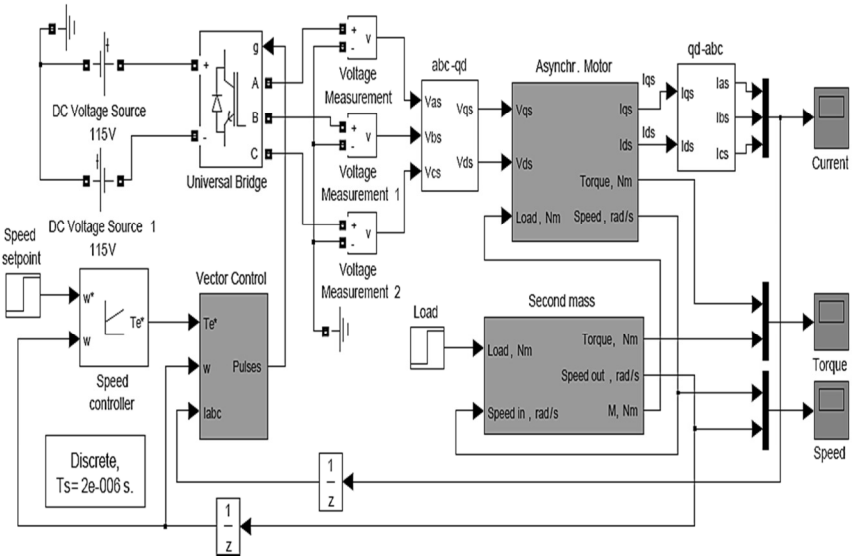

Fig. 9. Two-mass electromechanical system with PI vector controller

Two models were used for simulation: with non-controlled induction motor and model with vector control. The first simulation is performed with two-mass system, loaded with rated load, which is equal to 7 N·m after the speed reaches steady-state value. This is both cases the systems start at no load, and rated load is applied after 0.4 s. Reference speed is set up to 157 rad/s, i. e. synchronous speed of the motor. In this way simulated transients are shown in Fig. 10. Figure shows, that speed settling time is approximately 0.06 s of controlled system and is 5 times smaller than in the system without control. At application of rated load the speed does not change and remains constant.

Comparison of torque responses is presented in Fig. 11. Simulation results show that torque peak of uncontrolled system 4 times exceeds that of controlled and influences speed oscillations of two-mass system. The similar results can be observed at switching the load.

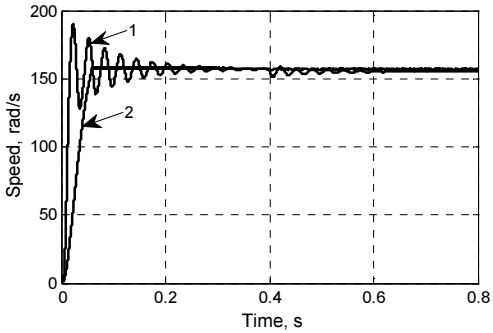

Fig. 10. Comparison of speed responses of two-mass electromechanical system at load torque 7 N·m: 1 – open loop system; 2 – vector control with PI controller

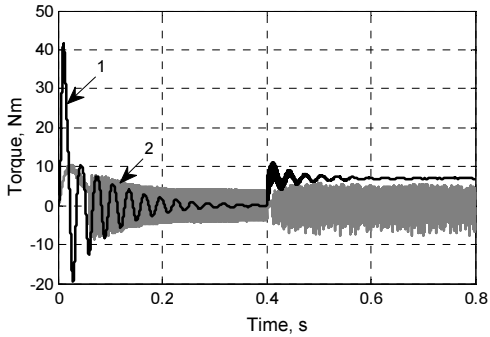

Fig. 11. Comparison of torque responses of two-mass electromechanical system at load torque 7 N·m: 1 – open loop system; 2 – closed loop system with PI controller

The model of electromechanical system with Fuzzy controller is elaborated. For this study is used a different model of induction motor, used model is described in synchronous reference frame. Two-mass control system includes speed and torque reference signals; both those can be changed. Speed reference signal corresponds to rated AC drive speed. In each experiment after 0.4 s, motor is loaded by 7 N·m load. Fig. 12 shows simulation results of

induction motor starting transients in uncontrolled system and in system with fuzzy logic controller.

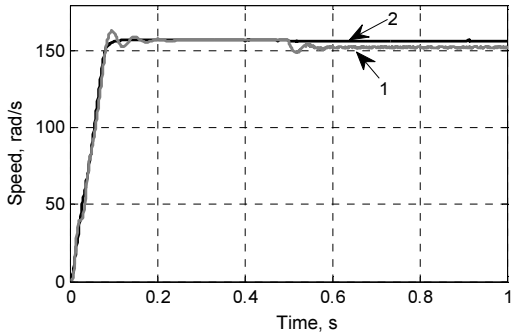

Fig. 12. Comparison of speed starting transients of induction motor in two-mass system: 1 – uncontrolled system; 2 – system with fuzzy controller

It is seen, that at the start up time, speed of an uncontrolled system oscillates. After load is applied, motor speed reduces and reaches value smaller than rated, while in the controlled system speed settles down without oscillations and after loading its value remains almost the same with negligible oscillations of small amplitude, what can be neglected. Settling time of two-mass fuzzy logic controlled system is 0.1 s.

Speed and torque responses of system with vector control and Fuzzy logic controllers provide higher transient specifications than uncontrolled systems.

4. Verification and Application of Research Results

Two-mass experimental system stand is designed to measure the speed and torque responses of first mass and to change the load. The stand is elaborated for 1.5 kW induction motor. Torque was measured by torque sensor of "Lorenz Messtechnik" company. Both elements were coupled by double-jointed coupling. Mounted experimental stand is shown in Fig. 13. For speed measurement one of torque measuring device signals, giving information about rotor angle position, is used. Repeating pulses can be expressed as function of input signals frequency. For speed measurement the converter changing frequency of pulses to direct current voltage, is applied. For this purpose special microchip LM2907N is used. All measuring circuit elements were calculated. Experimental stand to verify the simulation results was elaborated and investigated.

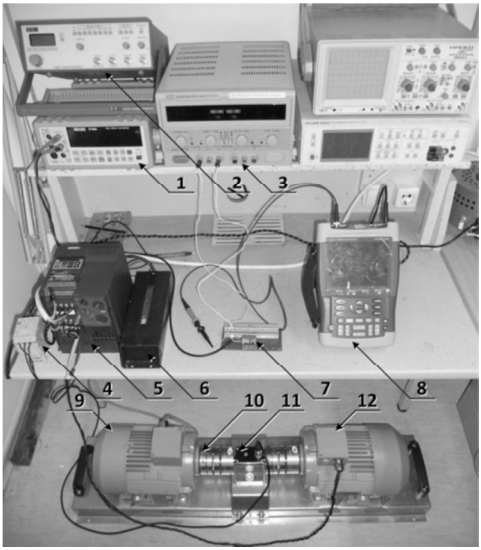

1 – Multimeter;
2 – frequency generator;
3 – power supply unit;
4 – contactor;
5 – frequency converter;
6 – braking resistance;
7 – speed measuring device;
8 – oscilloscope „Fluke“;
9 – main motor corresponding to the first mass;
10 – double-circuit coupling;
11 – torque meter;
12 – load motor as the second mass.

Fig. 13. View of two-mass system experimental stand

The first (main) motor is connected directly to the network. The second motor rotating in the opposite direction than the first is connected to the converter with braking resistor. It develops load for the main motor.

The comparison of speed responses is presented in Fig. 14.

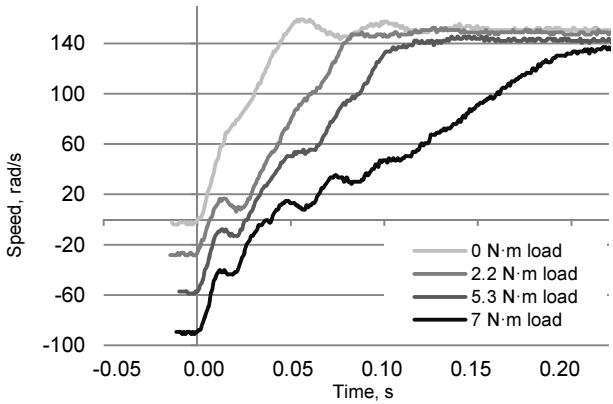

Fig. 14. Comparison of speed values of induction motor in experimental two-mass system with different load

Analysis of the curves shows that during the starting the initial steady state speed of the second mass (second motor) presents. Initial part of the curves show second mass breaking mode until it reaches zero speed then direction of rotation changes and first motor begins to dominate. Curve obtained at no-load is similar to that obtained by modeling of the single mass system, especially at steady state mode. However, oscillations are visible during acceleration; those are similar to obtained transient response by modeling of the two-mass system with elasticity.

Comparison of transient processes of torque with the same load is shown in Fig. 15. The test at load of 7 N·m shows the steady state torque value close to maximum value of the oscillations, indicating, that it was approached the maximum possible load.

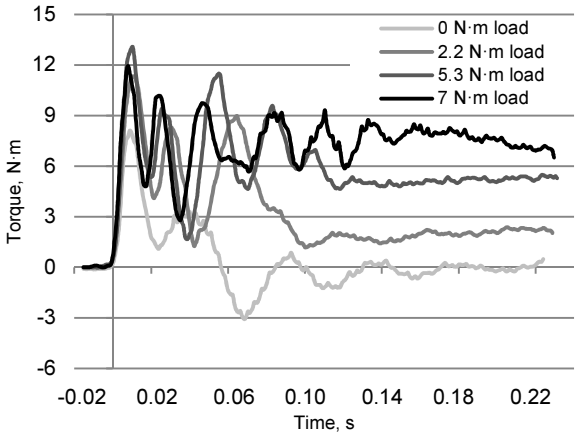

Fig. 15. Comparison of torque extrapolated values of induction motor in experimental two-mass system with different load

Comparison with the simulation results indicates that the first maximum value of torque is different and that can be explained in this way: simulation results show produced electromagnetic torque, while the experimental results present the shaft torque. Besides that, the simulation model is developed with underestimated the real motor parameters errors. However, comparing simulation and experimental results gives important possibility to understand and clarify the nature of the torque variation and its influence on different operating modes.

General Conclusions

1. The simulation models of two-mass electromechanical systems with induction motor in the stator reference frame and in the synchronous reference frame are developed and analyzed, that allow obtain the transient processes of torque and speed by changing the elasticity, clearance, the parameters of system controller and load. They show that during starting response curves have oscillating character, the maximum speed exceeds the rated value of 11.5 to 18 %, the maximum torque exceeds the rated value of 6.5 to 8.5 times, which may have destructive influence on the moving parts of the system.

2. The simulation model of elastic two-mass system with clearance are developed and analyzed. The dependence of elasticity and clearance are identified. At stiffness are C_{12} = 150 N·m/rad, the speed of motor jumps to a maximum value due to the elastic coupling, which is 37 % greater than the rated motor speed. The maximum speed increases in proportion to the value of clearance and, at clearance from -25 to 25; it is 62.5 % above the rated value, later it starts to decrease.

3. The simulation model of two-mass electromechanical systems with induction motor and vector control is developed and analyzed. The vector control reduces the settling time of speed response up to 0.06 s, without the periodic oscillations and overshoot of speed. Comparison with the uncontrolled system, the settling time of speed response decreased by 5 times, the maximum reached torque, at starting with rated load, is to 4 times smaller.

4. The simulation model of two-mass electromechanical systems with Fuzzy logic controlled of induction motor is developed and analyzed, providing greater stability of the speed responses and cancelling the periodic oscillations and the jumps of speed at changing the load. Compared with the uncontrolled system, the speed settling time is to 2 times smaller; the maximum transient torque of motor is 40 % smaller. Fuzzy control system in two-mass system allows reaching the transient responses of the speed, which are almost independent on the load. In the system with high elasticity the transient response of the torque has to 2.5 times smaller amplitude of oscillations.

5. Speed and torque responses of system with vector control and Fuzzy logic controllers provide higher transient quality of processes duration, maximum value, fading periodic oscillations than uncontrolled systems.

6. The experimental stand of two-mass electromechanical systems with induction motors was elaborated. The experimental results confirmed dynamic changes of speed responses obtained in simulations at different loads, the influence of the elastic coupling of mass to the responses is also confirmed. With increasing load, the settling time increases and the maximum available

speed reduces. In the largest vales of load, the settling time is 0.19 s; speed reaches value by 7.4 % smaller than the asynchronous speed. When the load switched on when the induction motor operates at steady state speed, the reached lower speed value depends on the value of the load torque. At the largest load value, the speed reaches value by 15.3 % smaller than the synchronous speed. Maximum speed settling time is equal to 0.18 s and is achieved at load of 4.8 N·m.

7. According to experimental results of torque, the transient processes have similarity of settling time and fading periodic oscillations in the received during the simulations. Increasing the load increases the duration of fading periodic oscillations. At the controlled load, when the load is evenly increased, significantly smaller oscillations are seen – the greatest value decreases about 7 times, but settling time is greater about 9 times. The results based on tests with different switched on load show that at 4.8 N·m load speed settling time is greater comparing with that at smaller and greater loads. This indicates the elasticity coupling of masses having the major impact at a certain load.

List of Published Works on the Topic of the Dissertation

In the reviewed scientific journals

Juraitis, S.; Rinkevičienė, R.; Kilikevičius, A. 2010. Two-mass Variable Speed Drive. *Electronics and electrical engineering.* No. 4(100): 25–28. Kaunas. ISSN 1392-1215 (Thomson Reuters Web of Science).

Juraitis, S.; Rinkevičienė, R.; Kriaučiūnas, J. 2011. Fuzzy Controller of Two-mass System. *Electronics and electrical engineering.* No. 10(116): 3–6. Kaunas. ISSN 1392-1215 (Thomson Reuters Web of Science).

Juraitis, S. 2010. Dvimasės elektromechaninės sistemos modelis. *Elektronika ir Elektrotechnika.* Vol. 2. No. 1: 85–89. Vilnius. ISSN 2029-2341.

In the other editions

Juraitis, S. Dvimasės elektromechaninės sistemos tyrimas. 2008. *Elektronika ir Elektrotechnika*, *11-osios Lietuvos jaunųjų mokslininkų konferencijos „Mokslas – Lietuvos ateitis“ medžiaga.* Vilnius: Technika. 135–143. ISBN 978-9955-28-373-7.

Juraitis, S.; Rinkevičienė, R.; Kriaučiūnas, J. 2009. Modeling of two-mass system with elasticity. *In Proceedings of the 4th International Conference Electrical and Control Technologies ECT-2009.* Kaunas: Technologija. 227–230. ISSN 1822-5934.

Juraitis, S.; Rinkevičienė, R.; Smilgevičius, A. 2009. Dynamic properties of two-mass electromechanical system. *In Proceedings of Doctoral School of Energy and Geotechnology*. Kuressaare, Estonia. 18–21. ISBN 978-9985-9089-1-4

Juraitis, S.; Rinkevičienė, R.; Kilikevičius, A. 2010. Modeling of Performance of two-mass variable speed drive in closed loop system. *In Proceedings of the 5th International*

Conference Electrical and Control Technologies ECT-2010. Kaunas: Technologija. 130–1334. ISSN 1822-5934.
Kriaučiūnas, J.; Rinkevičienė, R.; Juraitis, S. 2011. Simulation of Two-mass System with Fuzzy Controller. *In Proceedings of the 6th International Conference Electrical and Control Technologies ECT-2011.* Kaunas: Technologija. 105–108. ISSN 1822-5934.
Juraitis, S.; Rinkevičienė, R.; Smilgevičius, A. 2011. Experimental Investigation of Electric Drive Dynamics. *In Proceedings of Doctoral School of Energy and Geotechnology*. Pärnu, Estonia. 21–24. ISBN 978-9985-9089-1-4.

About the author

Sigitas Juraitis was born in Ignalina region, on 11 of December 1979.

Bachelor of Science degree in Electrical and electronic engineering at the Faculty of Electronics of Vilnius Gediminas Technical University, 2002. Master‘s degree in the same field at the Faculty of Electronics of Vilnius Gediminas Technical University, 2004. In 2008–2012 – PhD student of Vilnius Gediminas Technical University.

DVIMASĖS ELEKTROMECHANINĖS SISTEMOS PEREINAMŲJŲ VYKSMŲ TYRIMAS

Mokslo problemos aktualumas. Dvimasę sistemą sudaro du grandies elementai, turintys sąlyginai didelę masę ir tarpusavyje sujungti standžiąja jungtimi, kuri apibūdinama standumu ir kurioje gali būti laisvumas. Dėl savo netiesiškumo dvimasės sistemos aprašomos sudėtingomis diferencialinėmis lygtimis, kurias sunku išspręsti, todėl tokias sistemas tikslinga tirti imitaciniu ir eksperimentiniu metodu. Projektuojant sistemą dažnai sunku apskaičiuoti jai daromą įtaką ar numatyti sistemos parametrų daromą įtaką pereinamiesiems vyksmams ir gauti pageidaujamą išėjimo tikslumą, todėl mokslininkai daugelį problemų, susijusių su dvimasių sistemų tyrimu ir tobulinimu, sprendžia pasinaudodami kompiuterine analize.

Tyrimų objektas yra valdomos dvimasės elektromechaninės sistemos imitaciniai ir eksperimentiniai pereinamieji vyksmai.

Darbo tikslas. Ištirti sudarytų dvimasės elektromechaninės sistemos su nevaldomu, vektoriniu būdu valdomu ir neraiškiosios logikos reguliatoriumi valdomu asinchroniniu varikliu imitacinių modelių pereinamuosius vyksmus, palyginti gautus imitacijų rezultatus su eksperimentiniais.

Darbo uždaviniai

1. Sudaryti tampriosios dvimasės elektromechaninės sistemos su laisvumu imitacinį modelį.
2. Sudaryti dvimasės elektromechaninės sistemos su asinchroniniu varikliu imitacinį modelį.
3. Sudaryti dvimasės elektromechaninės sistemos vektorinio valdymo modelį.
4. Sudaryti dvimasės elektromechaninės sistemos su neraiškiosios logikos reguliatoriumi modelį.
5. Sukonstruoti dvimasės elektromechaninės sistemos su asinchroniniu variklių eksperimentinį stendą, sukurti greičio matavimo prietaisą skirtą dinaminiams elektromechaninės sistemos vyksmams tirti. Atlikti gautų eksperimentinių rezultatų analizę ir patikrinti imitacinių modelių adekvatumą.

Tyrimų metodika. Darbe naudojami analiziniai, skaitmeniniai ir eksperimentinio tyrimo bei neraiškiosios logikos metodai, objektinis kompiuterinių modelių sudarymas ir imitacijos. Imitaciniai modeliai sudaryti *Matlab*® *Simulink*® aplinkoje. Eksperimentiniai tyrimai atlikti Vilniaus Gedimino technikos universiteto Elektronikos fakulteto Automatikos katedroje sukonstruotu modeliu.

Mokslinis naujumas. Sprendžiant darbo uždavinius gauti šie elektros ir elektronikos inžinerijos mokslui nauji rezultatai:

1. Sudaryti nauji dvimasės elektromechaninės sistemos imitaciniai modeliai su mechaninės dalies standumu ir laisvumu, valdomi asinchroniniu varikliu.
2. Sudarytas naujas dvimasės elektromechaninės sistemos su vektoriniu būdu valdomu asinchroniniu varikliu imitacinis modelis, leidžiantis atlikti sistemos dinaminių vyksmų analizę, įvertinti pirmosios ir antrosios masės kampinio greičio ir momento pereinamuosius vyksmus, priklausomybę nuo apkrovos momento.
3. Sudarytas naujas dvimasės elektromechaninės sistemos su neraiškiosios logikos reguliatoriumi valdomu asinchroniniu varikliu imitacinis modelis, leidžiantis tirti tiek pirmosios, tiek antrosios masės kampinio greičio ir momento pereinamuosius vyksmus, jų priklausomybę nuo elektromechaninių sistemos parametrų ir apkrovos.

Praktinė vertė. Remiantis šio mokslinio darbo tyrimų rezultatais gali būti projektuojamos dvimasės elektromechaninės sistemos: imitacijos metu nustatomos antrosios masės, jungties tamprumas, galimas laisvumas, apkrovos

daroma įtaka, ir parenkami optimalūs sistemos parametrai. Remiantis gautais rezultatais galima parinkti projektuojamos automatinės valdymo sistemos reguliavimo metodą: kitimo dėsnius, valdymo poveikius, valdymo įtaisų parametrus, kai yra nežinomos atsitiktinių sistemą veikiančių apkrovų charakteristikos. Sudarytus modelius galima nesunkiai tobulinti, derinti, keisti, pritaikyti skirtingiems ar daliniams uždaviniams, su kuriais susiduriama kuriant dvimases elektromechanines sistemas, spręsti. Tyrimams atlikti buvo sukonstruotas greičio matavimo prietaisas, naudojantis standartinio momento matuoklio generuojamus impulsus, turintis tiesinę greičio ir impulsų dažnio priklausomybę. Sukurtą įrangą planuojama naudoti Vilniaus Gedimino technikos universiteto Automatikos katedros rengiamų mokymo programų praktininių užsiėmimų metu.

Ginamieji teiginiai

1. Sukurti asinchroniniu varikliu valdomų tampriųjų dvimasių elektromechaninių sistemų su laisvumu imitaciniai modeliai leidžia tirti dinaminius vyksmus, keičiant sistemos parametrus ar apkrovą.
2. Sukurtas dvimasės elektromechaninės sistemos su vektoriniu būdu valdomu asinchroniniu varikliu modelis leidžia sumažinti momento ir greičio svyravimus, iki 4 kartų sumažinti didžiausią variklio momentą, iki 5 kartų sutrumpinti pereinamojo vyksmo trukmę, sumažinti nusistovėjusio greičio paklaidą.
3. Sukurtas dvimasės elektromechaninės sistemos su neraiškiosios logikos reguliatoriumi modelis leidžia iki 40 % sumažinti didžiausią variklio momentą, iki 2 kartų sutrumpinti pereinamojo vyksmo trukmę, sumažinti nusistovėjusio greičio paklaidą bei stabilizuoti antrosios masės greitį; sistemoje su dideliu tamprumu leidžia iki 2,5 karto sumažinti momento pereinamųjų vyksmų švytavimų amplitudę.

Darbo apimtis. Disertaciją sudaro įvadas, keturi skyriai, rezultatų apibendrinimas, literatūros ir publikacijų disertacijos tema sąrašas. Disertacijoje yra 141 puslapis teksto, 85 paveikslai, 6 lentelės ir 135 numeruotos formulės. Rašant disertaciją panaudoti 87 literatūros šaltinis.

Pirmajame skyriuje pateikiama literatūros analizė ir redukuotos vienmasės sistemos bei tampriosios dvimasės sistemos su laisvumu matematinis aprašymas. Pateikiami asinchroninių variklių skirtingose koordinačių sistemose matematiniai modeliai, aprašomi vektorinio ir neraiškiosios logikos reguliatoriaus valdymo principai. Skyriaus pabaigoje formuluojamos išvados ir tikslinami disertacijos uždaviniai.

Antrajame skyriuje aprašomi sudaryti asinchroninių variklių imitaciniai modeliai, dvimasės sistemos modelis su variklio teorine momento kitimo laike išraiška, vektorinio valdymo ir neraiškiosios logikos reguliatoriaus imitaciniai modeliai. Skyriaus pabaigoje formuluojamos išvados.

Trečiajame skyriuje aprašomi dvimasės elektromechaninės sistemos imitaciniai modeliai su asinchroniniu varikliu, valdomu vektoriniu būdu ir neraiškiosios logikos reguliatoriumi, aprašomi imitaciniai bandymai, atlikti keičiant sistemos parametrus ir apkrovą, analizuojami gauti greičio ir momento pereinamieji vyksmai. Skyriaus pabaigoje formuluojamos išvados.

Ketvirtajame skyriuje aprašomas eksperimentinio stendo konstravimas, specialaus greičio matavimo prietaiso kūrimas, atlikti tyrimai su skirtingomis apkrovomis, gauti greičio ir momento pereinamieji vyksmai. Lyginant eksperimentinius rezultatus su imitaciniais, atliekama imitacinių rezultatų adekvatumo patikra.

Bendrosios išvados

1. Sudarius asinchroninių variklių imitacinius modelius stacionarioje ir besisukančioje koordinačių sistemose, gauti kampinio greičio ir momento pereinamieji vyksmai. Remiantis pereinamųjų veiksmų analize, galima teigti, kad pereinamojo vyksmo metu kreivės yra švytuojamojo pobūdžio, greičio didžiausios vertės viršija nominaliąsias 11,5–18 %, momento didžiausios vertės viršija nominaliąsias 6,5–8,5 karto, tai gali turėti neigiamą įtaką projektuojamoms sistemoms.
2. Sudarius ir ištyrus tampriosios dvimasės elektromechaninės sistemos su laisvumu imitacinį modelį, nustatytos tamprumo ir laisvumo priklausomybės. Standumui esant C_{12}=150 N·m/rad, pasiekiamas didžiausias variklio kampinis greitis, 37 % viršijantis nominalųjį variklio greitį. Tokį variklio greičio šuolį lėmė jungties tamprumas. Didžiausio greičio vertė didėja proporcingai laisvumui ir, esant laisvumui nuo -25 iki 25, 62,5 %, viršija nominaliąją vertę. Laisvumui viršijus minėtą tašką, didžiausias pasiekiamas greitis pradeda mažėti.
3. Vektorinis valdymas, sudarytoje dvimasės elektromechaninės sistemos su asinchroniniu varikliu imitaciniame modelyje, sutrumpina sistemos greičio pereinamąjį vyksmą iki 0,06 s. Jo metu nėra periodinių švytavimų ir greičio šuolių. Lyginant su nevaldoma sistema, pereinamojo vyksmo trukmė sumažėjo iki 5 kartų. Valdomoje sistemoje didžiausias pasiekiamas momentas yra iki 4 kartų mažesnis, lyginant su nevaldoma sistema.
4. Kintant apkrovai, sudarytas dvimasės elektromechaninės sistemos, valdomos neraiškiosios logikos reguliatoriumi, imitacinis modelis palaiko greičio pereinamuosius vyksmus be periodinių švytavimų ir greičio šuolių.

Lyginant su nevaldoma sistema, greičio pereinamasis vyksmas trunka iki 2 kartų trumpiau, variklio didžiausias momentas yra 40 % mažesnis. Neraiškusis valdymas dvimasėse sistemose leidžia pasiekti tokius greičio pereinamuosius vyksmus, kuriems apkrova beveik neturi įtakos. Sistemoje su dideliu tamprumu momento pereinamasis vyksmas turi iki 2,5 karto mažesnę švytavimų amplitudę.

5. Sistemų su vektorinio valdymo ir neraiškiosios logikos reguliatoriais pereinamųjų vyksmų trukmės, didžiausios vertės ir gęstančių periodinių švytavimų kokybės rodikliai yra geresni negu nevaldomų sistemų.

6. Remiantis eksperimentų rezultatais patvirtintas imitacijų metu gautų greičio pereinamųjų vyksmų dinaminis kitimas esant skirtingoms apkrovoms, patvirtinta masių jungties tamprumo daroma įtaka. Didėjant apkrovai, ilgėja pereinamojo vyksmo trukmė ir mažėja pasiekiamas greitis. Esant didžiausiai bandytai apkrovai pereinamasis vyksmas trunka 0,19 s, greičio nusistovėjusi vertė yra 7,4 % mažesnė už asinchroninį greitį. Įjungus apkrovą kai variklio greitis nusistovėjęs, pasiekiama mažesnė greičio vertė priklauso nuo apkrovos momento dydžio. Esant didžiausiai bandytai apkrovai, pasiekiama greičio vertė yra 15,3 % mažesnė už asinchroninį greitį. Ilgiausia pereinamojo vyksmo trukmė yra lygi 0,18 s ir pasiekiama esant 4,8 N·m apkrovai.

7. Remiantis momento eksperimentiniais rezultatais, nustatytas pereinamųjų vyksmų panašumas trukme ir gęstančiais periodiniais švytavimais į gautus imitacijų metu. Didinant apkrovą, ilgėja gęstančių periodinių švytavimų laikas. Panaudojus valdomą apkrovą, kai apkrova yra tolygiai didinama, matomi žymiai mažesni švytavimai – didžiausia momento vertė sumažėjo apie 7 kartus, tačiau pereinamojo vyksmo laikas pailgėjo apie 9 kartus. Remiantis bandymų, kurių metu įjungiama skirtinga apkrova, rezultatais, matoma, kad esant 4,8 N·m apkrovai gaunamas ilgesnis greičio pereinamojo vyksmo laikas, lyginant su charakteristikomis esant mažesnei ir didesnei apkrovai. Tai lemia masių jungties tamprumas, darantis didžiausią poveikį esant tam tikrai apkrovai.

Trumpos žinios apie autorių

Sigitas Juraitis gimė 1979 m. gruodžio 11 d. Ignalinos rajone.

2002 m. įgijo elektros inžinerijos bakalauro laipsnį Vilniaus Gedimino technikos universiteto Elektronikos fakultete. Ten pat 2004 m. įgijo elektros inžinerijos mokslo magistro laipsnį. 2008–2012 m. – Automatikos katedros doktorantas.

Sigitas Juraitis

RESEARCH OF TRANSIENT PROCESSES
IN ELECTROMECHANICAL TWO-MASS SYSTEM

Summary of Doctoral Dissertation
Technological Sciences, Electrical and Electronic Engineering (01T)

Sigitas Juraitis

DVIMASĖS ELEKTROMECHANINĖS
SISTEMOS PEREINAMŲJŲ VYKSMŲ TYRIMAS

Daktaro disertacijos santrauka
Technologijos mokslai, elektros ir elektronikos inžinerija (01T)

2012 05 02. 1,5 sp. l. Tiražas 70 egz.
Vilniaus Gedimino technikos universiteto
leidykla „Technika“, Saulėtekio al. 11, LT-10223 Vilnius
http://leidykla.vgtu.lt
Spausdino UAB „Ciklonas“,
J. Jasinskio g. 15, 01111 Vilnius