VILNIAUS GEDIMINO TECHNIKOS UNIVERSITETAS
ELEKTRONIKOS FAKULTETAS
ELEKTROS INŽINERIJOS KATEDRA

Aleksandras Labuc

KINTAMOSIOS ĮTAMPOS REGULIATORIAUS, PAREMTO „BUCK-BOOST“ KEITIKLIU, TYRIMAS

INVESTIGATION OF AC VOLTAGE REGULATOR BASED ON THE AC-AC BUCK-BOOST CONVERTER

Baigiamasis magistro darbas

Elektros energetikos sistemų inžinerijos studijų programa, valstybinis kodas 6211EX049
Atsinaujinančios elektros energetikos inžinerijos specializacija
Elektros inžinerijos studijų kryptis

Vilnius, 2023

VILNIUS GEDIMINAS TECHNICAL UNIVERSITY
FACULTY OF ELECTRONICS
DEPARTMENT OF ELECTRICAL ENGINEERING

Aleksandras Labuc

KINTAMOSIOS ĮTAMPOS REGULIATORIAUS, PAREMTO „BUCK-BOOST“ KEITIKLIU, TYRIMAS

INVESTIGATION OF AC VOLTAGE REGULATOR BASED ON THE AC-AC BUCK-BOOST CONVERTER

Master Thesis

Electrical energetics systems engineering study programme, state code 6211EX049
Renewable electrical energy engineering specialisation
Elektros inžinerijos studijų kryptis

Vilnius, 2023

VILNIAUS GEDIMINO TECHNIKOS UNIVERSITETAS
ELEKTRONIKOS FAKULTETAS
ELEKTROS INŽINERIJOS KATEDRA

TVIRTINU
Katedros vedėjas

_____
(Parašas)
doc. dr. S. Tolvaišienė

_____
(Data)

Aleksandras Labuc

KINTAMOSIOS ĮTAMPOS REGULIATORIAUS, PAREMTO „BUCK-BOOST“ KEITIKLIU, TYRIMAS

INVESTIGATION OF AC VOLTAGE REGULATOR BASED ON THE AC-AC BUCK-BOOST CONVERTER

Baigiamasis magistro darbas

Elektros energetikos sistemų inžinerijos studijų programa, valstybinis kodas 6211EX049
Atsinaujinančios elektros energetikos inžinerijos specializacija
Elektros inžinerijos studijų kryptis

Vadovas prof. dr. Voitech Stankevič _____ _____
(Parašas) (Data)

Vilnius, 2023

VILNIAUS GEDIMINO TECHNIKOS UNIVERSITETAS
ELEKTRONIKOS FAKULTETAS
ELEKTROS INŽINERIJOS KATEDRA

TVIRTINU
Katedros vedėjas

_____
(Parašas)
doc. dr. S. Tolvaišienė

_____
(Data)

Elektros inžinerijos studijų kryptis

Elektros energetikos sistemų inžinerijos studijų programa,

valstybinis kodas 6211EX049

Atsinaujinančios elektros energetikos inžinerijos specializacija

BAIGIAMOJO BAKALAURO DARBO
UŽDUOTIS
2023-03-14 Nr. __
Vilnius

Studentui ALEKSANDRAS LABUC

Baigiamojo darbo tema:

Kintamosios įtampos reguliatoriaus, paremto „buck-boost“ keitikliu, tyrimas

patvirtinta 2023 m. kovo 14 d. dekano potvarkiu Nr. 40el.

Baigiamojo darbo užbaigimo terminas 2023 m. gegužės 26 d.

BAIGIAMOJO DARBO UŽDUOTIS:

Išanalizuoti šiuo metu naudojamus kintamosios srovės elektros sistemose įtampos reguliavimo metodus.
Išnagrinėti kintamosios srovės "buck-boost" veikimo principus ir valdymo metodus.
Sukurti kintamosios srovės įtampos reguliatoriaus principinę schemą; naudojant kompiuterinį modeliavimą ištirti schemos pagrindinių elementų parametrų įtaką keitiklio efektyvumui bei valdymui; parinkti keitiklio optimalius parametrus.
Naudojant modeliavimo rezultatus surinkti kintamosios srovės įtampos reguliatoriaus prototipą ir ištirti jo parametrus.
Keitiklio modeliavimui naudoti LTspice kompiuterinę programą. Gautus modeliavimo rezultatus atvaizduoti grafikų pavidale.
Apibendrinti gautus rezultatus ir padaryti išvadas. Remiantis gautais rezultatais pateikti rekomendacijas ir siūlymus dėl tolesnių tyrimų bei galimus šių keitiklių panaudojimo būdus.

Baigiamojo bakalauro darbo konsultantai: prof. dr. Voitech Stankevič
(Pedag. vardas, vardas, pavardė)

Vadovas ..... prof. dr. Voitech Stankevič
(Parašas) (Pedag. vardas, vardas, pavardė)

Užduotį gavau

……..
(Parašas)
Aleksandras Labuc

2023-03-14

Vilniaus Gedimino technikos universitetas
Elektronikos fakultetas
Elektros inžinerijos katedra

ISBN | ISSN
Egz. sk. .....
Data .....-.....-.....

Antrosios pakopos studijų **Elektros energetikos sistemų inžinerijos** programos magistro baigiamasis darbas	
Pavadinimas	**Kintamosios įtampos reguliatoriaus, paremto „Buck-Boost“ keitikliu, tyrimas**
Autorius	**Aleksandras Labuc**
Vadovas	**Voitech Stankevič**

Kalba: anglų

Anotacija

Šiame magistro darbe nagrinėjamas kintamosios srovės įtampos reguliatoriaus, pagrįsto kintamosios srovės keitiklio "buck-boost" topologija, sukūrimas, siekiant įveikti kintamosios srovės įtampos reguliavimo metodų trūkumus kintamosios srovės elektros energijos sistemose. Teorinėje dalyje apžvelgiami autotransformatoriai ir transformatoriaus atšakos keitimo įtampos reguliavimas, įtampos svyravimai ir dinaminis valdymas, kartu nagrinėjamos įvairios AC/AC Buck-Boost keitiklio konstrukcijos ir jų charakteristikos. Praktinė dalis apima kintamosios srovės įtampos reguliatoriaus projektavimą, modeliavimą ir analizę, po to surenkamas ir išbandomas fizinis prototipas. Padarytos išvados rodo, kad AC-AC buck-boost keitiklis yra efektyvus ir kompaktiškas sprendimas kintamosios įtampos reguliavimui, o pasiūlytas reguliatorius pasižymi patenkinamais parametrais. Ateities tyrimams rekomenduojama optimizuoti reguliatorių, sumažinti sąnaudas ir atlikti ekonominio pagrįstumo analizę, kad būtų užtikrintas gyvybingumas rinkoje. Šis darbas prisideda prie pažangos kintamosios įtampos reguliavimo srityje ir pateikia praktinio įgyvendinimo įžvalgų.

Darbo apimtis - 37 puslapiai teksto be priedų, 25 paveikslai, 2 lentelės ir 19 bibliografinių šaltinių.

Prasminiai žodžiai: Kintamosios įtampos reguliatorius, kintamosios srovės „buck-boost“ keitiklis, kintamosios įtampos reguliavimas.

Vilnius Gediminas Technical University
Faculty of Electronics
Department of Electrical Engineering

ISBN | ISSN
Copies No. .....
Date .....-.....-.....

Master Degree Studies **Electrical Energetics Systems Engineering** study programme Master Graduation Thesis

Title	**Investigation of AC Voltage Regulator Based on the AC-AC Buck-Boost Converter**
Author	**Aleksandras Labuc**
Academic supervisor	**Voitech Stankevič**

Thesis language: English

Annotation

This master thesis investigates the development of an AC voltage regulator based on the AC-AC buck-boost converter topology, aiming to overcome the limitations of current voltage regulation techniques in AC power systems. The theoretical part provides an overview of autotransformers and transformer tap changing voltage regulation, voltage sags, and dynamic control, while exploring various AC/AC Buck-Boost designs and their characteristics. The practical part involves the design, simulation, and analysis of the AC voltage regulator, followed by the assembly and testing of a physical prototype. The conclusions drawn indicate that the AC-AC buck-boost converter offers an efficient and compact solution for AC voltage regulation, and the proposed regulator demonstrates satisfactory performance. Recommendations for future research include optimization of the regulator, cost reduction, and economic feasibility analysis to ensure market viability. Overall, this work contributes to advancing AC voltage regulation and offers insights for practical implementation.

Thesis consists of: 37 pages of text without appendixes, 25 figures, 2 tables and 19 bibliographical entries.

Keywords: AC voltage regulator, AC-AC buck-boost converter, AC voltage regulation.

VILNIAUS GEDIMINO TECHNIKOS UNIVERSITETAS

	Aleksandras Labuc, 20173856	
	(Studento vardas ir pavardė, studento pažymėjimo Nr.)	
	Elektronikos fakultetas	
	(Fakultetas)	
	Elektros energetikos sistemų inžinerija, EEIfmu-21	
	(Studijų programa, akademinė grupė)	

BAIGIAMOJO DARBO (PROJEKTO)
SĄŽININGUMO DEKLARACIJA

2023 m. gegužės 25 d.

Patvirtinu, kad mano baigiamasis darbas tema „Kintamosios įtampos reguliatoriaus, paremto „Buck-Boost“ keitikliu, tyrimas“ yra savarankiškai parašytas. Šiame darbe pateikta medžiaga nėra plagijuota. Tiesiogiai ar netiesiogiai panaudotos kitų šaltinių citatos pažymėtos literatūros nuorodose.

Parenkant ir įvertinant medžiagą bei rengiant baigiamąjį darbą, mane konsultavo mokslininkai ir specialistai: profesorius daktaras Voitech Stankevič. Mano darbo vadovas profesorius daktaras Voitech Stankevič.

Kitų asmenų indėlio į parengtą baigiamąjį darbą nėra. Jokių įstatymų nenumatytų piniginių sumų už šį darbą niekam nesu mokėjęs (-usi).

			Aleksandras Labuc
	(Parašas)		(Vardas ir pavardė)

CONTENTS

LIST OF FIGURES **9**

LIST OF TABLES **10**

INTRODUCTION **11**

1. THEORETICAL AND METHODOLOGICAL PARTS OF THE THESIS **12**

1.1. Autotransformers as voltage regulators 12
1.2. Transformer tap changing voltage regulation 13
1.3. Voltage sags and dynamic control 14
1.4. AC/AC Buck-Boost types and work principle 15
1.5. Alternative AC/AC Buck-Boost designs 17
1.6. Buck-boost characteristics 18
1.7. Control signal generation for buck-boost switch operation 19

2. CIRCUIT MODELING AND SIMULATION **21**

2.1. Idealized circuit and dynamic feedback control simulation 21
2.2. Circuit simulation and analysis with non-idealized switches 24

3. EXPERIMENTAL SETUP AND ASSEMBLY **29**

3.1. Assembly and testing of a physical prototype 29

CONCLUSIONS AND RECOMMENDATIONS **34**

REFERENCES **36**

LIST OF FIGURES

1. Single-phase tapped autotransformer. 12
2. On-load electronic semiconductor tap changer scheme 13
3. Results of matrix method; a–injected voltage; b–output voltage 15
4. AC/AC Separate BUCK-BOOST Converter 16
5. AC/AC 2-switch single-phase buck-boost converter 17
6. AC/AC flyback converter 17
7. AC/AC Cuk converter 18
8. Circuit diagram of idealized 2-switch AC/AC buck-boost converter 21
9. Modeled idealized 2-switch AC/AC buck-boost converter. 21
10. Converter working in different modes based on its duty cycle 22
11. Dynamic feedback PWM switch controller. 22
12. AC/DC Full-wave bridge rectifier. 23
13. Modeled converter (with feedback) input/output diagram at different inputs. 23
14. Circuit diagram of non-idealized AC/AC 2-MOSFET buck-boost converter. . 24
15. Modeled non-idealized AC/AC 2-MOSFET buck-boost converter. 24
16. Modeled AC/AC 2-MOSFET buck-boost converters efficiency in relation to capacitor and inductor combination 25
17. Input and output voltages and input current wave shapes of the modeled AC/AC 2-MOSFET buck-boost converter 26
18. Performance of AC/AC 2-MOSFET buck-boost converter under duty cycle change 28
19. Circuit diagram of assembled AC/AC 2-MOSFET buck-boost converter. . . 29
20. Schematics of MOSFET driver control circuit. 29
21. Assembled AC/AC 2-MOSFET buck-boost converter. 30
22. Input/output voltage wave shapes of assembled AC-AC 2-MOSFET buck-boost converter when D=0.5 31
23. Input/output voltage wave shapes of assembled AC-AC 2-MOSFET buck-boost converter when D=0.3 32
24. Input/output voltage wave shapes of assembled AC-AC 2-MOSFET buck-boost converter when D=0.7 32
25. Inductor voltage wave shapes of assembled AC-AC 2-MOSFET buck-boost converter during different duty cycles 33

LIST OF TABLES

1. Circuit design parameters for AC/AC 2-switch buck-boost converter 21
2. Performance of the modeled AC/AC 2-MOSFET buck-boost converter. . . . 28

INTRODUCTION

Cheap, small-sized, high-efficiency switching DC / DC converters are very popular in technology. However, the switching method of converting electrical energy is also actively used in other devices: inverters, rectifiers, motor drivers, LEDs, and audio amplifiers. Nevertheless, when it is necessary to convert an alternating voltage of an industrial frequency of 50 Hz, then from the available solutions, one recalls either bulky low-frequency transformers or complex and inefficient devices with an intermediate DC link that needs additional filtering and regulations [1].

Of course, the scope of AC / AC converters is not yet as broad [1–4] as this needs further development – usually, these are power regulators and voltage stabilizers of an industrial network. There is a growing demand for converters that can efficiently interact with the current power grid system due to the fast expansion of alternative energy sources, such as solar and wind power. These converters must adapt to the complicated and dynamic operating conditions related to alternative energy production. Therefore, power electronics developers are gradually facing tasks that require a deep understanding of the pulsed conversion of electrical energy, which, when creating DC / DC converters, were not paid attention to as unnecessary.

Considering the above, it is evident that we should explore new ways to achieve more effective AC regulation and pulse regulation. One of the approaches to be explored is utilizing controlled semiconductor technology. This thesis aims to increase and enhance the academic and practical areas of knowledge in AC voltage regulation, including investigating voltage regulation methods by high-frequency pulse regulators, electronic control systems, and output current quality identification and dynamic control.

Aim of master thesis: Design, simulate and analyze the performance of an AC voltage regulator based on the AC-AC buck-boost converter topology. Assemble a working example.

Objectives of master thesis:

1. Analyze currently used voltage regulation techniques in AC power systems.
2. Study the principles, operation, and control techniques of the AC-AC buck-boost converter.
3. Create a design for the AC voltage regulator based on the AC-AC buck-boost converter.
4. Verify the design by using computer simulations to evaluate the AC voltage regulator's performance.
5. Assemble and test a physical prototype of the AC voltage regulator.
6. Conclude the investigation's results, and offer suggestions for further research and possible uses.

1 THEORETICAL AND METHODOLOGICAL PARTS OF THE THESIS

1.1. Autotransformers as voltage regulators

An autotransformer differs from a traditional transformer in that it incorporates a single winding that is utilized by both sides (input and output). The common winding is wrapped around a single magnetic core. As a result, an autotransformer's main and secondary sides are magnetically and electrically coupled. To deliver a portion of the primary voltage to the secondary load, this single winding is tapped throughout its length (this way they can control and adjust output voltage levels). The primary advantage of this transformer design is its cost-effectiveness for a given power rating. The principal diagram can be seen in Fig. 1.

The device's primary purpose is voltage regulation. In addition, autotransformers can also lessen the effect of burning the neutral conductor (which occurs because of imbalance in the load or a malfunction in the system). Or used to alter and balance the voltage between the phases, which helps to distribute the current more evenly (reduce some asymmetry).

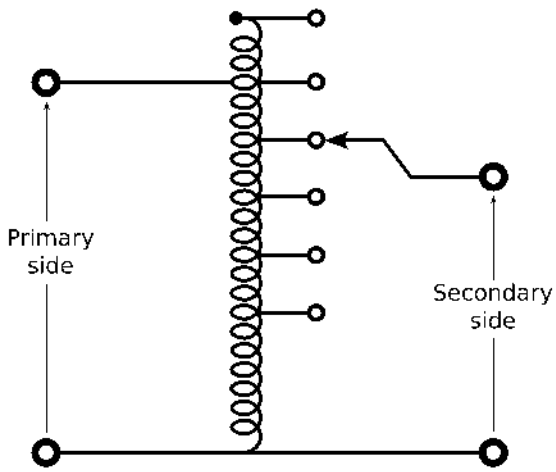

Figure 1: Single-phase tapped autotransformer.

The main drawback of an autotransformer is its inability to offer the primary-to-secondary winding isolation present in a conventional double-wound transformer. Also, in the event that the secondary winding becomes disconnected (open-circuit), the flow of the current through the primary winding is interrupted, resulting in the application of the full input voltage to the output terminals. And if a short circuit occurs in the secondary circuit, the increased magnetic flux linkage can cause significant damage to the autotransformer [5].

Also mechanical switching of winding to control voltage is slow and not smooth (does it by built increments); also, places of contacts are eroded due to high temperature in the arc zone, which lowers lifetime and creates reactive losses.

1.2. Transformer tap changing voltage regulation

For the regular operation of consumers, it is necessary to maintain a certain level of voltage on the substation buses. In electrical networks, voltage regulation methods are provided, one of which is changing the transformation ratio of transformers. It is known that the transformation ratio is defined as the ratio of the primary voltage to the secondary, or

$$n = \frac{U_1}{U_2} = \frac{w_1}{w_2} \tag{1}$$

where w_1, w_2 are the number of turns of the primary and secondary windings, respectively.

Traditionally the windings of transformers are supplied with additional taps, with which the transformation ratio is changed. Tap switching can occur after disconnecting all windings from the network, which does not allow adjusting the voltage during the day, as this would require frequent disconnection of the transformer for switching, which is practically unacceptable under operating conditions. On-load tap changer (OLTC) allows you to switch transformer winding taps without breaking the circuit. The on-load tap-changer provides for voltage regulation within various limits depending on the power and voltage of the transformer (usually with steps of 1%) [6].

The early generalization of AC voltage in electric lines was an apparent incentive to use tap-changers coupled with transformers used in energy distribution to achieve simple voltage stability. The taps were initially chosen manually and then electromechanically. This switching type is not smooth or good quality and experiences delays as it needs to move physically. Because of this degradation of movement of parts and electric arcs during tap changing, it requires constant contact and oil maintenance which can get expensive quickly [7].

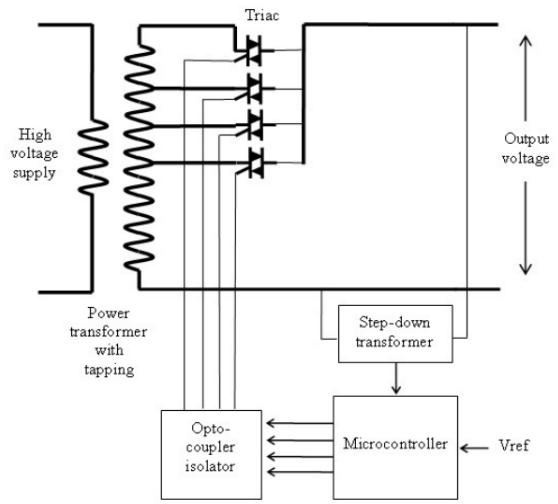

Figure 2: On-load electronic semiconductor tap changer scheme [8].

In articles [8–11], to avoid these problems, a method of discrete electrical switching of transformer output based on semiconductors or thyristors is proposed Fig. 2. This

method provides maintenance-free contactless switching and can quickly modify existing infrastructure. Fast reaction and a minimal spark during the tap shifting procedure highlight electrical tap changers. However, this method has a reliability issue; when the thyristor is damaged, the system cannot switch voltage. To assess this problem, one of the articles [10] presents a method of a hybrid system where the characteristics of mechanical and electrical switching devices are combined. This, in turn, gives the fast response time of full-electric switching without their reliability issues and the arcs and contact erosion of mechanical switching.

1.3. Voltage sags and dynamic control

Voltage disturbances are a vital power quality issue that industries face. Temporary drops in the magnitude of AC voltage below its nominal value are called voltage sags or dips. Several things can cause these occurrences, such as electrical grid problems, short circuits, or abrupt changes in load demand. Electrical systems and sensitive equipment that experience voltage sags may experience malfunctions, disturbances, and damage. Dynamic management of voltage is crucial to reducing the impact of voltage sags. A voltage regulation system's purpose is quick regulation of the converters switching characteristics for output voltage changes to compensate for the difference from nominal values. Quick response times are essential to successfully combat voltage sags and provide an uninterrupted power supply to linked equipment.

It has been proven through case studies [4, 12–14] and their simulation findings that dynamic control solutions can efficiently detect voltage sags. The converter's switching characteristics may be quickly adjusted to account for voltage differences using these techniques [4, 14]: Hysteresis Voltage Control technique, RMS Value Evaluation Method, Missing Voltage Technique, and Peak Value Evaluation. Specifically for three-phase systems, article [4] also proposes voltage sag detection based on Phase Angle Analysis, which can detect dips as soon as they appear (only one cycle needed), as it does not need many calculations.

Traditional methods include Fourier and Wavelet transform. The Fourier transform provides information on the frequency distribution (equally spaced spectral lines) of a signal's amplitude and phase. The discrete wavelet transform is an efficient method for identifying and isolating frequencies at certain time intervals by employing a set of spectral lines arranged in a geometric series [13]. However, these methods cannot contribute to a "live" dynamic voltage compensator as they require much time to compute and give results only after the sag occurs.

Article [12] proposes a faster matrix method that determines phase shift and voltage drop in an easier-to-interpret form. The method entails taking a sample of the supply and storing the information in a matrix format; results are shown in Fig. 3:

$$
\begin{aligned}
V_s upplypresent &= |V_1|cos(\omega_1 t + \phi_1) + |V_5|cos(\omega_5 t + \phi_5) \\
V_s upplypast_1 &= |V_1|cos(\omega_1 t - \omega_1 T + \phi_1) + |V_5|cos(\omega_5 t - \omega_5 T + \phi_5) \\
V_s upplypast_2 &= |V_1|cos(\omega_1 t - 2\omega_1 T + \phi_1) + |V_5|cos(\omega_5 t - 2\omega_5 T + \phi_5) \\
V_s upplypast_3 &= |V_1|cos(\omega_1 t - 3\omega_1 T + \phi_1) + |V_5|cos(\omega_5 t - 3\omega_5 T + \phi_5)
\end{aligned} \tag{2}
$$

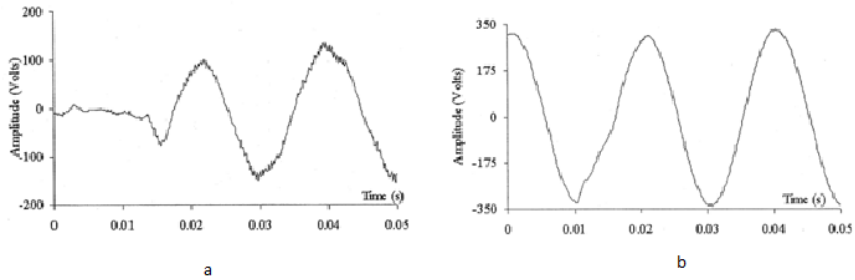

Figure 3: Results of matrix method; a–injected voltage; b–output voltage [12].

1.4. AC/AC Buck-Boost types and work principle

Because of the complexity of semiconductors, AC/AC converters are more complicated to build than other types of converters. This is related to problems with switching in AC/AC converters; the bipolar switches cannot be turned on simultaneously due to the possibility of a short circuit. The load can also be inductive; therefore, a high-frequency operation is burdensome.

A semiconductor buck-boost AC/AC converter is a power electronic device used to convert the energy of a single-phase [1] or multi-phase [4] AC input with specific parameters (phases, voltage, and frequency) into AC output with different parameters. The converter achieves this by utilizing semiconductor devices, such as thyristors or insulated gate bipolar transistors (IGBTs), to control the switching of electrical signals. By manipulating the switching patterns of these semiconductors, the converter can regulate the voltage magnitude, frequency, and waveform shape of the output AC signal. The buck-boost configuration allows the converter to both step up (boost) or step down (buck) the input voltage, enabling a wide range of applications in power conversion and voltage regulation systems (to adjust voltage irregularities or dips). Therefore, this system can be used as a replacement for the autotransformer (because of its lack of galvanic isolation, in case of malfunctions of the on-tap switches, this leads to the appearance of the voltage of the primary power source on the output) or as a substitution for it.

All AC/AC converters are divided into voltage regulators, frequency converters, and switches according to their functional purpose. They can be implemented in a circuit with an intermediate DC circuit [15] and without an intermediate DC circuit in the form of a circuit with a direct connection of the input and output AC circuits through semiconductor devices.

A matrix controller, often referred to as a matrix chopper, is an example of an direct AC/AC converter that has a constant output frequency [3]. The matrix controller works by transforming the AC input into the required AC output using a matrix of programmable semiconductor switches. This converter topology eliminates the need for an intermediary DC circuit and enables effective power conversion and voltage management [3]. One significant drawback is the complexity in terms of circuit design and control algorithms (requires exact and complicated switching patterns for effective functioning).

AC/AC converters with a DC link are complex two-stage converters that include an input converter in the form of a rectifier, an intermediate link with a filter, and an output converter in the form of a stand-alone voltage or current inverter. Depending on the type of autonomous inverter, the DC circuit is implemented as a link that provides a constant voltage (usually C or an LC filter) or as a link that maintains a constant current (filter in the form of a reactor with a significant inductance) [3]. But this setup causes harmonics in the input current, resulting in poor power quality [1].

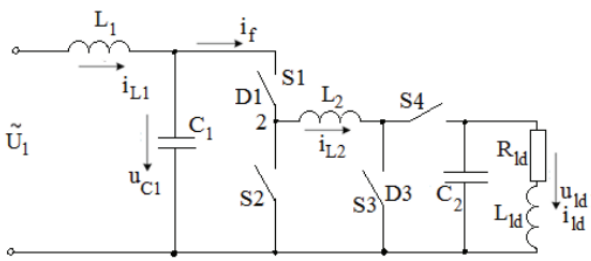

Figure 4: AC/AC Separate BUCK-BOOST Converter [2].

Article [2] proposes a buck-boost converter made of connected separate buck and boost converters that can switch from one to another Fig. 4. Switches S2 and S1 run the circuit in Buck mode when switches S4 and S3 are on and off. Switch S3 and S4 run the circuit in Boost mode while switch S1 is on and switch S2 is off. To assure the requisite quality of voltage and current signals, filters are required at both the circuit's input and output [2]. Although this method enables the execution of both - buck and boost operations, it has several disadvantages. First, using several switches (four bi-directional switches in this example) makes the converter circuit more complex and expensive. The additional switches necessitate more drive circuitry and control signals, which can complicate the overall system design and raise the risk of errors or failures. Second, the addition of switches to the converter circuit results in more switching losses and power loss that goes along with it. Each switch has its own conduction and switching losses, which lowers the converter's total efficiency. Additional filtering and shielding procedures may be necessary to reduce switching noise and electromagnetic interference (EMI), which can grow when several switches are present.

1.5. Alternative AC/AC Buck-Boost designs

While the article [2] proposed solution can be considered a more straightforward and easier-to-execute solution, another design from the paper [16] with fewer switches could be used Fig. 5. The suggested converter can save money and enhance dependability since they only need two active components. Buck-boost converters with two switches can step up or down voltages with a minimum component count. A 2-switch buck-boost converter can fulfill both duties based on the duty cycle range. It operates as a buck if the duty ratio is less than 0.5 and as a boost if larger than 0.5. In contrast to the other two converters, the output voltage has polarity reversal with regard to the input voltage (for feedback and closed-loop control, an inverting op-amp is necessary).

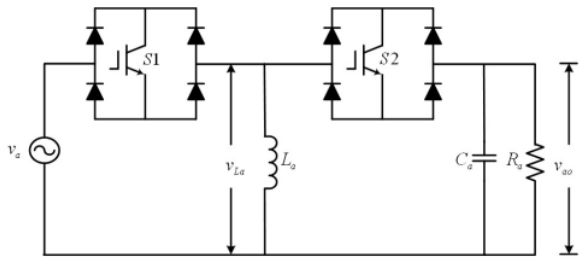

Figure 5: AC/AC 2-switch single-phase buck-boost converter [16].

For high gain, i.e., a very tiny or huge duty cycle, the efficiency is low. As a result, a high-gain operation is not possible with this converter. For a duty cycle of 0.7 or 0.3, efficiency can be as low as 60%. For a duty cycle of 0.5, it has a 90% efficiency. Also, there is no input-to-output isolation, which could be crucial in many applications.

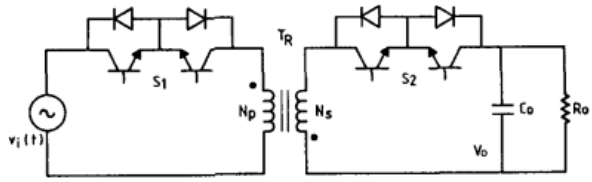

Figure 6: AC/AC flyback converter [17].

The discussed inability of the buck-boost converter to be separated by a transformer running at the switching frequency is usually fixed by implementing a transformer to provide isolation before or after the power converter rather than using the high-frequency switching frequency process to save space, money, and weight. In work [17], a flyback converter Fig. 6, is proposed, a modification of the 2-switch buck-boost converter. A transformer working at the switching frequency is used to achieve AC voltage control as well as isolation. This way, the system's size and weight have been reduced.

In paper [18], a buck-boost converter in Cuk configuration Fig. 7 is proposed, which showed high efficiency (89%), lower ripple current in input and output, and is capable of

correcting 60% voltage sags and 30% voltage swells within a cycle. A continuous current at the converter's input and output significantly benefits the Cuk topology. The Cuk converter has many reactive components and high current strains on the switch, both disadvantages.

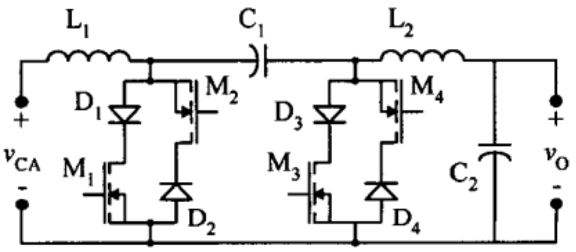

Figure 7: AC/AC Cuk converter [18].

When the switch in a Cuk converter is closed, the capacitor supplies energy to the load and acts as an inductive filter. However, when the switch is turned off, the energy held in the filter inductor is returned to the load. In a Buck-Boost converter, the source is disconnected from the load when the switch is closed, and the energy stored in the inductor is fed back to the source when the switch is opened.

1.6. Buck-boost characteristics

Power semiconductors, including their packaging, are the most important parts of three-phase AC/AC converter systems [19]. They not only define crucial performance metrics like efficiency, power density, and the switching frequency range that may be used, but they also contribute about 25% of the entire converter expenses [19]. Semiconductor efficiency can be more than 99%, but the efficiency of the converter based on them is usually up to 95% [19].

For optimal performance choosing the right external power components is crucial (inductors, capacitors, diodes, switches, and input and output capacitors). Necessary circuit parameters: $V_{IN(min)}$ and $V_{IN(max)}$ (input voltage), V_{OUT} (nominal Output Voltage), $I_{OUT(max)}$ (maximum output current), f_{SW} (switching frequency).

Determine max duty cycle D

$$D = 1 - \frac{-V_{OUT}}{-V_{OUT} + V_{IN(min)}} \tag{3}$$

Rearranging Equation 3 gives us our converter conversion ratio

$$\frac{V_{OUT}}{V_{IN}} = \frac{-D}{1-D} \tag{4}$$

Calculating maximum switch current

In order to compute the maximum switch current the inductor ripple current must be determined:

$$I_L(pp) = \frac{V_{IN(min)}D}{f_{SW}L} \tag{5}$$

Average inductor current:

$$I_{L(avg)} = \frac{I_{OUT}}{1-D} \tag{6}$$

Maximum inductor current:

$$I_{L(max)} = I_{L(avg)} + \frac{I_{L(pp)}}{2} \tag{7}$$

Checking if the switch can withstand the output current requirement of the application:

$$I_{SW(max)} = I_{OUT(max)} \frac{V_{IN(min)} - V_{OUT}}{V_{IN(min)}} + \frac{I_L(pp)}{2} \tag{8}$$

Selecting inductor

Calculating needed inductance

$$L = \frac{V_{IN} D}{I_{L(avg)} f_{SW}} \tag{9}$$

Selecting capacitors

The input and output currents are both pulsed and to achieve reliable performance, the input and output capacitances must be carefully chosen.

The input capacitance is necessary to maintain the input voltage when the energy in the inductor decreases $\frac{1-D}{f_{SW}}$. Effective value:

$$C_{IN(min)} = \frac{I_{L(avg)} D}{f_{SW}(V_{IN(pp)} - I_{L(pp)} ESR_C)} \tag{10}$$

where ESR_C equivalent series resistance of the capacitor.

The output capacitor is necessary to give energy to the load while the inductor's energy is growing $\frac{D}{f_{SW}}$. Effective value:

$$C_{OUT(min)} = \frac{I_{OUT} D}{f_{SW}(V_{OUT(pp)} - (\frac{I_{OUT}}{1-D} + \frac{I_{L(pp)}}{2}) ESR_C)} \tag{11}$$

1.7. Control signal generation for buck-boost switch operation

By altering the pulse width of a fixed-frequency rectangular waveform, pulse width modulation (PWM) allows you to manipulate specific analog values. The application includes voltage regulation, power level control, and a highly effective method for regulating analog circuits.

The duty cycle represents the proportion of time the signal is in the "on" state compared to the total time period. The duty cycle is typically expressed as a percentage, where 100% signifies that the signal is consistently in the "on" state. A lower duty cycle corresponds to reduced power as the signal is turned off for a significant portion of the time.

A simple PWM generator with a feedback controller can be made using operational amplifiers (op-amps). It would consist of 4 parts: a differential amplifier, a comparator, a

triangular-wave generator, and a reference voltage. The differential amplifier amplifies the voltage difference between the inverting and non-inverting inputs. It can compare input voltage with a reference and generate an error signal (input and reference difference). The signal is then compared with a triangular wave using an op-amp comparator. The op-amp voltage comparator examines the amplitudes of two voltage inputs and identifies the largest of the two. This generates a PWM signal with a constant duty cycle. It can be further improved by adding filters, buffers, current feedback, microcontrollers, and PID controllers.

2 CIRCUIT MODELING AND SIMULATION

2.1. Idealized circuit and dynamic feedback control simulation

For our experiment, we will be using an AC/AC 2-switch buck-boost converter Fig. 8. This solution was picked because it only uses two switches, and the output voltage can be less than or greater than the input voltage. So we will be able to have a constant output voltage regardless of the input voltage amplitude change with a minimal component count.

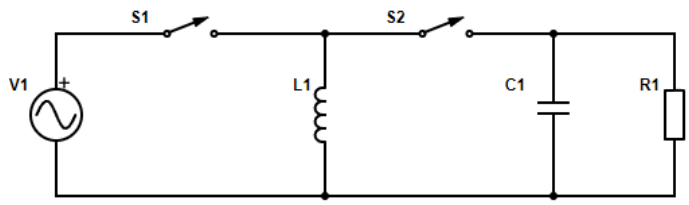

Figure 8: Circuit diagram of idealized 2-switch AC/AC buck-boost converter

A fundamental buck-boost converter has two operational states:

1. When switch SW1 is turned on, and SW2 is off, a direct connection exists between the input and the inductor L1. As a result, energy builds up in inductor L1; at the same time, capacitor C1 supplies its stored energy to the resistor R1 (output/load).

2. When switch SW1 is off, and SW2 is on, energy is transported from the charged inductor L1 to the output load R1 and the capacitor C1.

Table 1: Circuit design parameters for AC/AC 2-switch buck-boost converter

$V_{IN(min)}$	$V_{IN(max)}$	f_{IN}	V_{OUT}	f_{PWM}	R_{LOAD}	L	C
100V	340V	50Hz	220V	0,01MHz	50 Ohm	0,5mH	50uF

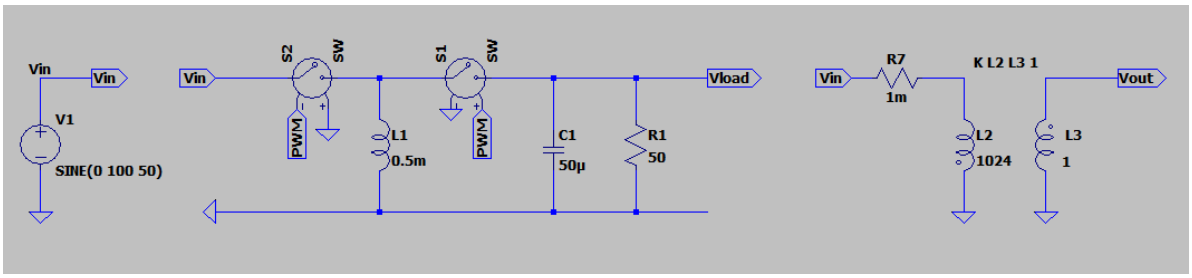

Figure 9: Modeled idealized 2-switch AC/AC buck-boost converter.

A 2-switch Buck-boost converter Fig. 9 circuit was created using the LTspice program. The purpose of it is to test the performance and feasibility of this model for voltage regulation. A step-down transformer with a turn ratio of 32 decreased the voltage for the buck-boost

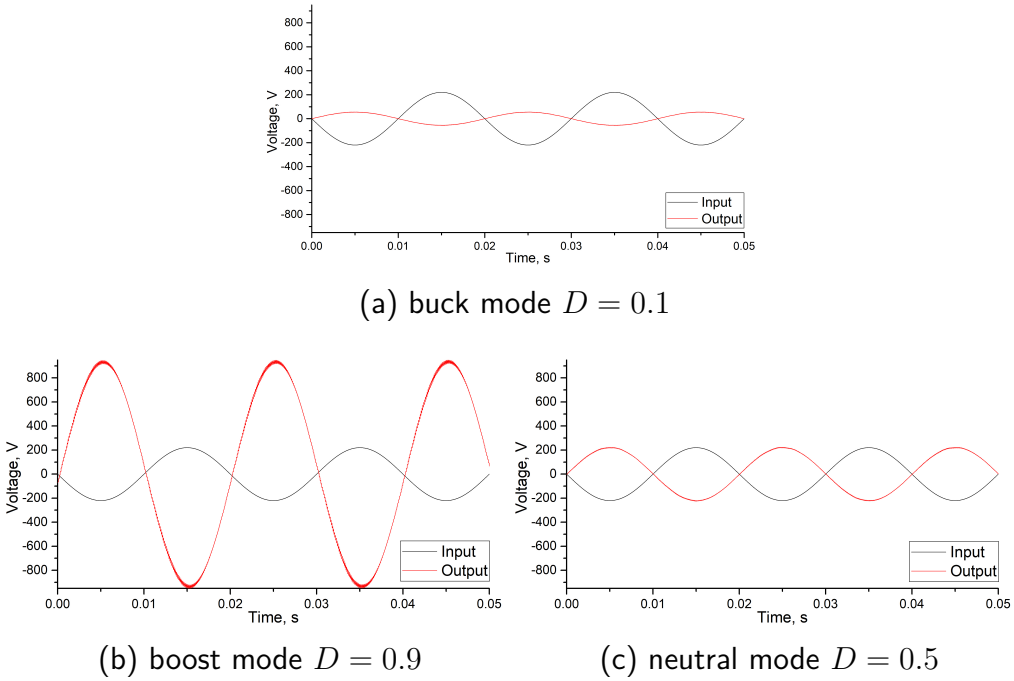

(a) buck mode $D = 0.1$

(b) boost mode $D = 0.9$

(c) neutral mode $D = 0.5$

Figure 10: Converter working in different modes based on its duty cycle

controller circuit. Effective values of the capacitor and inductor for the circuit were calculated using Equations 3 - 11 using parameters from Table 1.

A constant PWM generator with different duty cycles was used for the first test. Boost (voltage increase, duty cycle $D = 0.9 > (1 - D)$) Fig. 10(a), buck (voltage decrease, duty cycle $D = 0.1 < (1 - D)$) Fig. 10(b), and neutral (duty cycle $D = 0.5 = (1 - D)$) Fig. 10(c) modes were checked.

The first test results Fig. 10 showed that the buck-boost converter can increase and decrease voltage to a substantial degree (during input of 220V the output can be in the range from 50V Fig. 10(a) to up to 800V Fig. 10(b), or stay the same at 220V Fig. 10(c)). This proved its usefulness as an AC voltage regulator. The output voltage can be set to anything; it can be lower or higher than the input voltage. This functionality may use feedback control to regulate the converter's output voltage automatically. So to improve it, an automatic control circuit and a full-wave bridge rectifier with a smoothing capacitor were added.

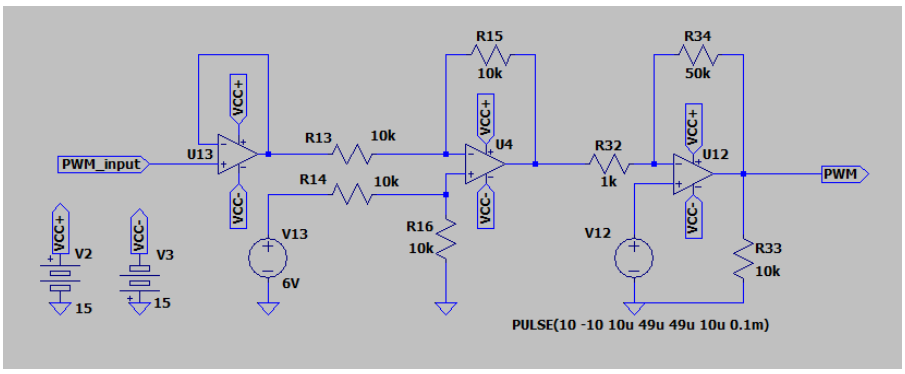

Figure 11: Dynamic feedback PWM switch controller.

The automatic control circuit Fig. 11 works with DC voltage, so a full bridge rectifier Fig. 12 was needed to convert feedback voltage (input) from AC to DC. In the control circuit, the voltage proportional to the output voltage (Vout = PWM_input) is compared to a reference voltage (V13), which creates a PWM pattern (PWM) by a comparator that is fed with the difference and a triangular pulse wave (V12). The PWM pattern switches the bidirectional switches and keeps the controller's output voltage constant according to the reference voltage. The triangular pulse wave frequency determines the switching frequency.

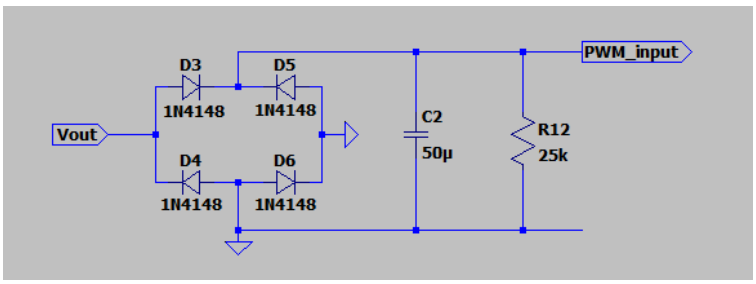

Figure 12: AC/DC Full-wave bridge rectifier.

The automatic control circuit (see Fig. 11) results are presented in Fig. 13. From these diagrams, we can conclude that with the change in input voltage (100V Fig. 13(a), 220V Fig. 13(b), and 340V Fig. 13(c)), the output voltage remained almost constant in all cases at 250V. High-frequency switching necessitates filters to reduce voltage ripple and increase quality.

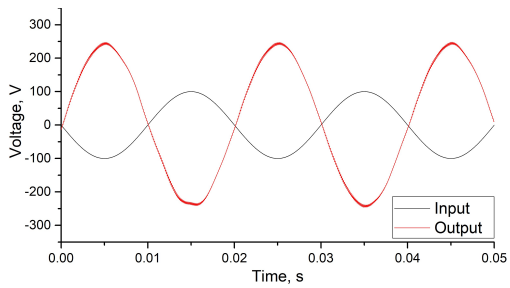

(a) $V_{IN} = 100V$

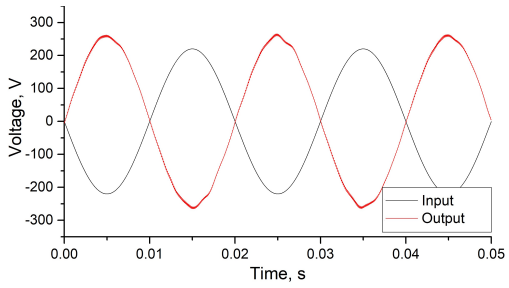

(b) $V_{IN} = 220V$

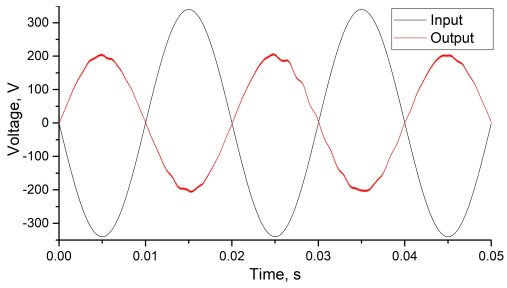

(c) $V_{IN} = 340V$

Figure 13: Modeled converter (with feedback) input/output diagram at different inputs.

2.2. Circuit simulation and analysis with non-idealized switches

Our second experiment will use the same topology but with a MOSFET instead of the idealized switches. The circuit for a Buck-boost converter that uses switched-mode PWM with realistic components for AC/AC voltage conversion is presented in Fig. 14. Unlike a DC-DC buck-boost converter, this circuit has two routes for the positive and negative cycles.

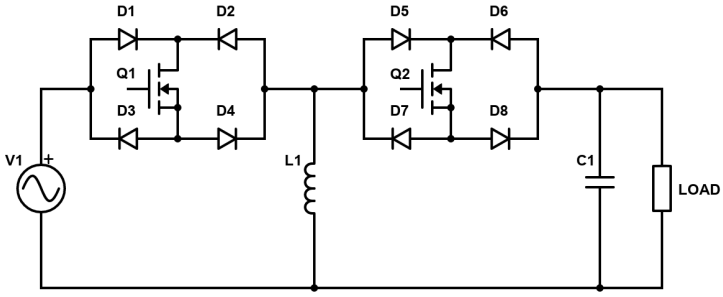

Figure 14: Circuit diagram of non-idealized AC/AC 2-MOSFET buck-boost converter.

In order to stop the current flow when a MOSFET is used to switch an AC signal, it must shut off during the negative half-cycle. If the body diode conducts during this time, it will create undesired currents and impair functionality. So, the circuit bypasses the MOSFET body diodes by utilizing a diode bridge (diodes D1, D2, D3, D4, and D5, D6, D7, D8). It ensures the body diodes do not conduct during the AC signal's negative half-cycle, and current flows only from the drain to the source of MOSFET during each half-cycle (positive half-cycle: D1 to D4 and D5 to D8; negative half-cycle: D6 to D7 and D2 to D3).

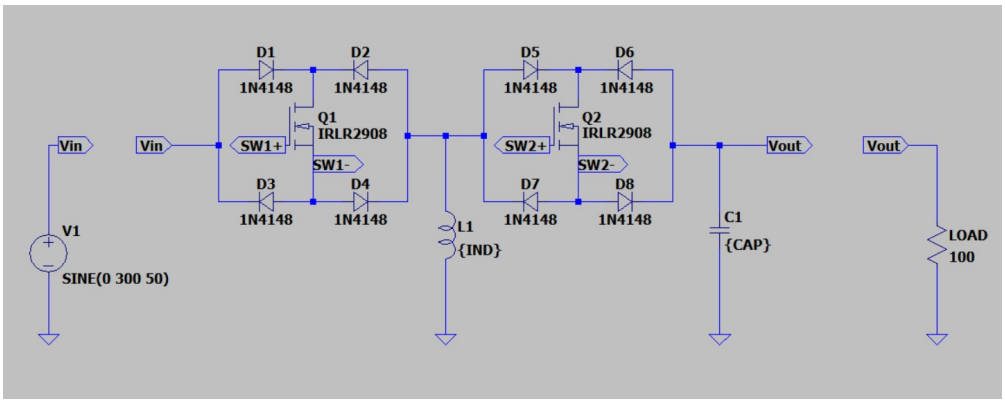

Figure 15: Modeled non-idealized AC/AC 2-MOSFET buck-boost converter.

The LTspice simulation tool is used to create the more realistic buck-boost converter simulation model Fig. 15, employing MOSFETs and diode bridges. This model aims to assess the efficiency and practicality of voltage control with a MOSFET-based Buck-boost converter. The inductance (ranges from 1mH to 15mH) and capacitance (ranges from 0.1uF to 21uF) were selected based on the efficiency relation of the converter Fig. 16 that was calculated using simulation data. The objective was to determine the ideal ratio of inductance and capacitance that would produce the converter's best efficiency.

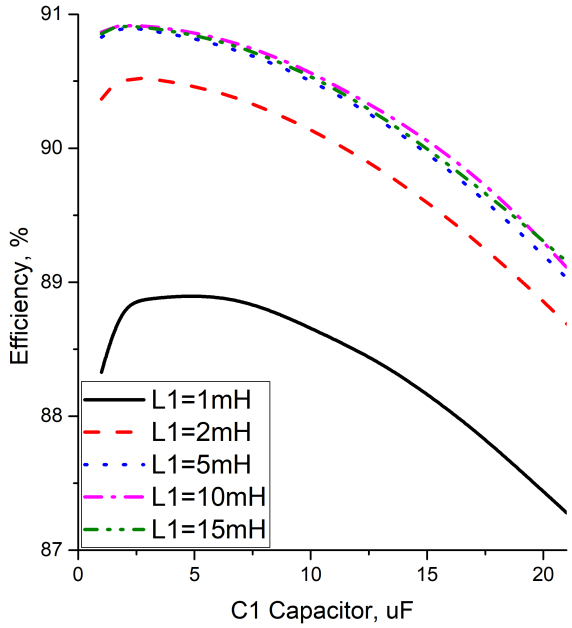

Figure 16: Modeled AC/AC 2-MOSFET buck-boost converters efficiency in relation to capacitor and inductor combination

Among the measured capacitance values (in Fig. 16), it was found that a 3uF capacitance produced the maximum efficiency (best trade-off between performance and usability). The efficiency results for inductance between 5mH and 15mH were very comparable, with declining returns beyond 5mH. Due to its smaller value, 5mH was selected because it will have a faster transient response, reduced cost, and small size and weight.

An LC input filter with a 5mH inductor and a 3uF capacitor was added to improve the direct AC/AC converter's power factor; it lessens the load on the power supply and improves overall system efficiency. The capacitor makes up for any phase changes between the voltage and current, while the inductor smooths out the current waveform, lowering the reactive power component. By decreasing harmonic distortions in the input current and moderating reactive power flow, the LC input filter is crucial for improving the power factor. The converter's power factor was found to be less than 50% without this filter.

The modeled AC/AC Buck-Boost converter input and output voltage and input current waveforms are presented in Fig. 17, which demonstrates the ability of the converter to provide sinusoidal output and in-phase input current. The performance of the circuit has been evaluated at different duty cycles by monitoring these values (an input voltage of 300 V, a load of 100 Ohm, and a switching frequency of 10kHz): Efficiency (%), input power factor (PF, %), input current and output voltage total harmonic distortion (THD, %), and voltage gain.

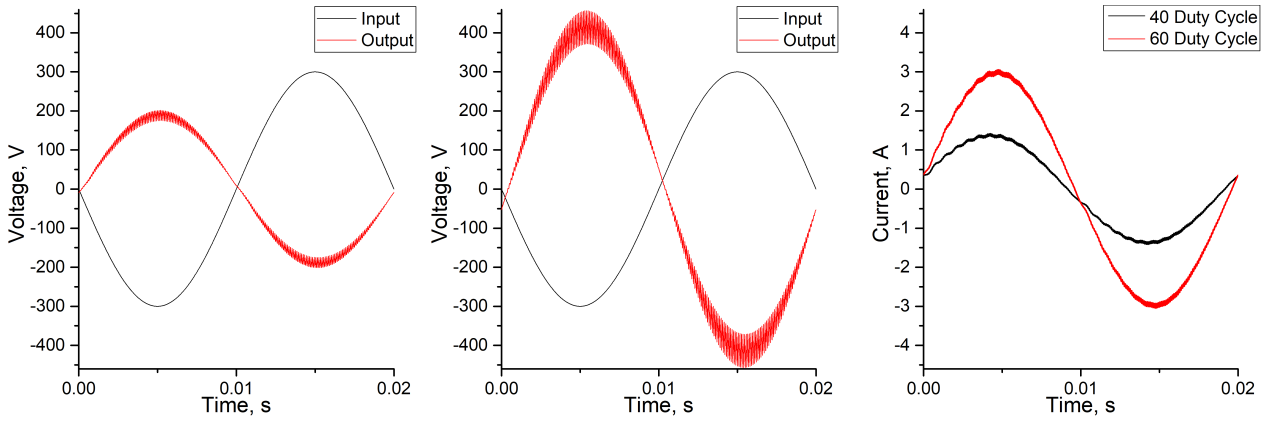

(a) Input/Output at $D = 0.4$ (b) Input/Output at $D = 0.6$ (c) Input current

Figure 17: Input and output voltages and input current wave shapes of the modeled AC/AC 2-MOSFET buck-boost converter

Commands used in LTspice simulation for the calculation and performance measurements are:

```
*Calculating the VOLTAGE_GAIN
.meas VOLTAGE_GAIN RMS V(Vout)/V(Vin)

*Calculating the POWER FACTOR
.meas WORKING_POWER AVG -I(v1)*V(Vin)
.meas APPARENT POWER RMS I(v1)*V(Vin)
.meas POWER_FACTOR param WORKING_POWER/APPARENT_POWER

*Fourier analysis for Total Harmonic Distortion (THD) calculation
.four 50 V(Vout) I(V1)

*Component parameters used for simulation
.step param DUTY_CYCLE 10 90 10
.step param IND list 5m
.step param CAP list 3u
```

Results of the buck-boost converter (from Fig. 15) are presented in Table 2 and Fig. 17 and 18 (the duty cycle (D) values range from 0.1 to 0.9, showing the Q1 MOSFET ON time ratio to the total period,while the Q2 MOSFET ON time is $1 - D$). From these results, we can conclude that the modeled buck-boost converter works as intended and with good performance:

In Fig. 18(a), it is demonstrated that power losses are increased when attempting to change the voltage's magnitude by using a duty cycle that is noticeably higher or lower than 0.5. Higher switching losses, increased conduction losses, or a combination of both can be

blamed for the decline in efficiency. Therefore, operating the converter closer to a duty cycle of 0.5 (with an efficiency of 90%) is preferable to maximize efficiency and reduce power loss.

In Fig. 18(b), Power Factor (measures how well the converter uses the incoming power) relation to duty cycle is shown. It declines as the duty cycle deviates from 0.5 (when close to it has a relatively high value of 80%). A rise in harmonic content and non-linearities in the converter's operation are some of the causes of the power factor decline. In order to maintain a higher power factor, reduce reactive power flow, and ensure optimal usage of the input power from the source, it is beneficial to operate the converter closer to a duty cycle of 0.5.

In Fig. 18(c), Voltage Gain relation to duty cycle is depicted, and higher duty cycle allows for a larger voltage gain (up to -3.21), which makes it easier to modify voltage levels (or leave them the same). It grants more flexibility to satisfy individual application needs.

In Fig. 18(d), Output Voltage Root Mean Square (RMS) (for input and output voltage) relation to duty cycle is illustrated, representing the effective value of the output voltage. It increases as the duty cycle is $D > 0.5$ and decreases when $D < 0.5$, indicating that a higher duty cycle leads to increased input voltage and vice versa. At duty cycle D 0.5 the input and output voltage is the same (neutral mode).

In Fig. 18(e), Total Harmonic Distortion (THD) (for input current and output voltage) relation to duty cycle is observed, where higher duty cycles result in a clearer and less distorted input current waveform as the input current THD tends to decline (from 7.2% to 0.3%) as the duty cycle rises. The input current has a longer conduction time and can approach a sinusoidal waveform more closely. On the other hand, the output voltage THD tends to rise (from 3.9% to 8.7%), indicating a higher presence of harmonic components and more distortion in the output voltage waveform. The switching activity and the components' non-linear properties are the leading causes of this distortion. These patterns show how the converter's input and output properties interact, highlighting the necessity of balancing input current distortion and controlling output voltage distortion when choosing the proper duty cycle and components for optimum converter performance.

Table 2: Performance of the modeled AC/AC 2-MOSFET buck-boost converter.

Duty Cycle	V_{OUT} RMS, V	Efficiency, %	Voltage Gain	I_{IN} THD, %	V_{OUT} THD, %	Power Factor, %
0.1	22	62.11	0.10	7.19	3.86	22.74
0.2	50	83.52	0.23	3.29	3.36	61.44
0.3	86	89.56	0.41	3.04	3.64	77.05
0.4	134	91.21	0.63	2.61	4.24	80.28
0.5	199	90.82	0.94	2.09	5.03	80.99
0.6	293	88.84	1.37	1.71	5.91	81.06
0.7	428	84.21	2.02	1.28	6.84	80.63
0.8	592	73.23	2.89	0.75	7.79	78.73
0.9	530	43.94	3.21	0.31	8.72	72.08

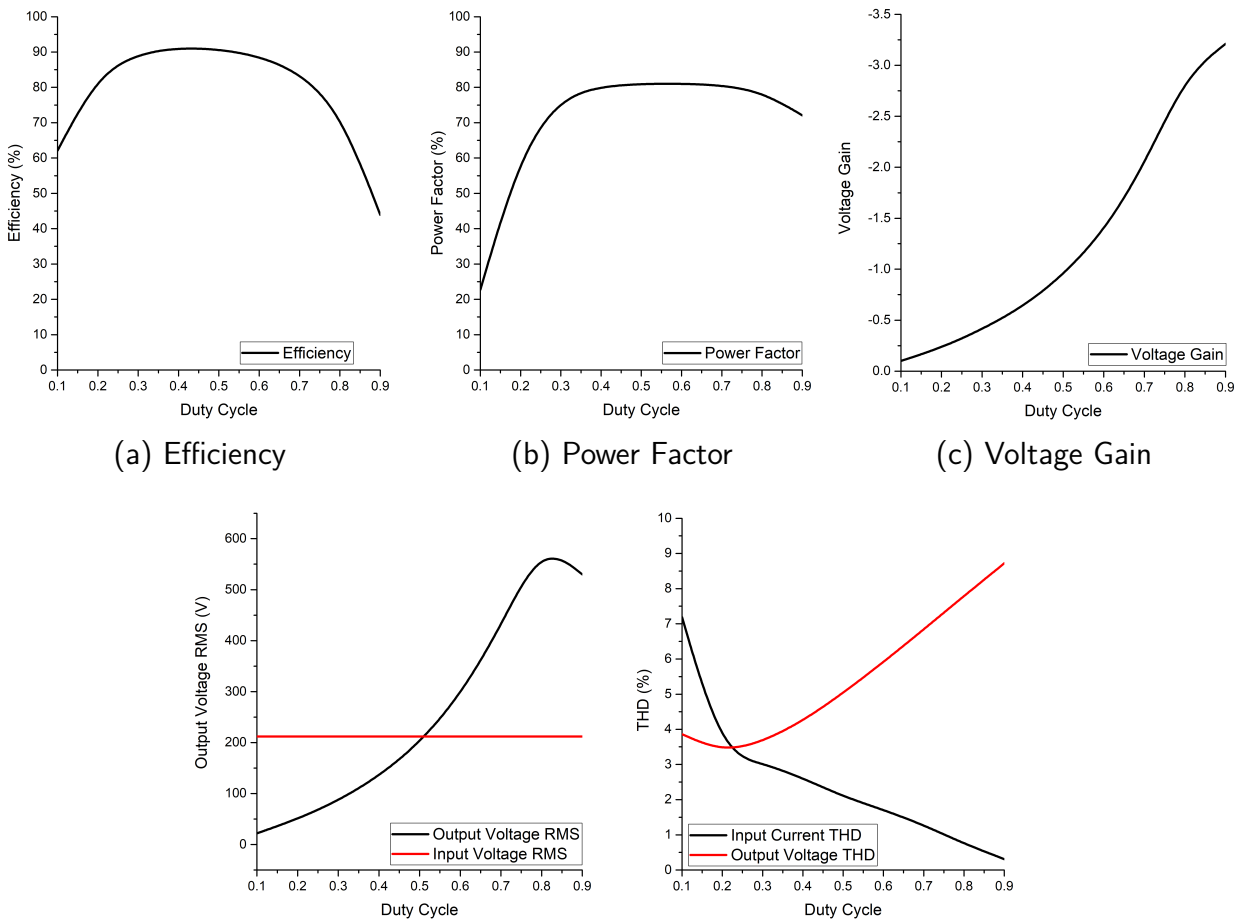

(a) Efficiency (b) Power Factor (c) Voltage Gain

(d) Input/Output Voltage RMS (e) Input Current and Output Voltage THD

Figure 18: Performance of AC/AC 2-MOSFET buck-boost converter under duty cycle change

3 EXPERIMENTAL SETUP AND ASSEMBLY

3.1. Assembly and testing of a physical prototype

In this section, we will discuss the circuit assembly and testing of the AC/AC 2-MOSFET buck-boost converter based on the investigation of an AC voltage regulator. The physical implementation of the circuit allows us to evaluate its performance and verify the simulation results obtained previously. The circuit incorporates a number of additional components and features that enhance its functionality and protect the circuitry.

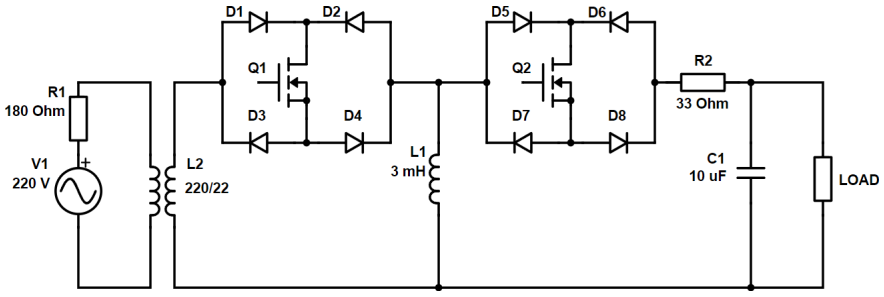

Figure 19: Circuit diagram of assembled AC/AC 2-MOSFET buck-boost converter.

Fig. 19 illustrates the circuit diagram of the assembled AC/AC 2-MOSFET buck-boost converter. The voltage is lowered to a safe level using an L2 transformer (220/22 ratio) to guarantee safety and compatibility with used low-power components (Diodes, MOSFETS, Resistors, Capacitors). The current is also limited by an R1 resistor, protecting the components from any harm. For testing reasons, the LOAD resistor has been set at 0 Ohms.

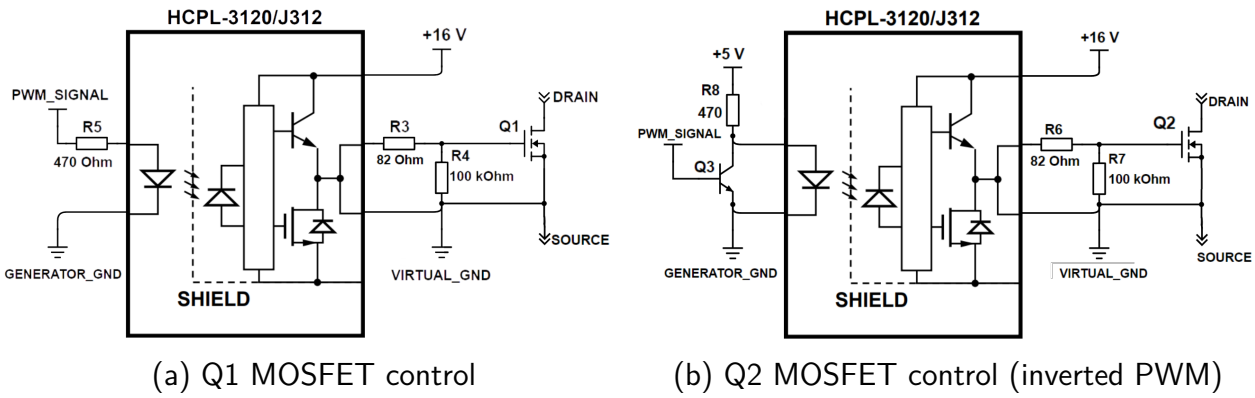

Figure 20: Schematics of MOSFET driver control circuit.

MOSFET driver control circuits are used to control the MOSFET switches appropriately. The design for the MOSFET driver control circuit is presented in Fig. 20. These drivers offer isolation between the main circuit and the PWM generator, allowing for effective, safe, and reliable switching. The Q3 NPN transistor in one of the drivers also serves for inverting the PWM input signal for Q2 (because its duty cycle is $1 - D$). The resistors R3(82 Ohm), R5(470 Ohm), and R6(82 Ohm), R8(470 Ohm) serve as limiting resistors in the control

circuit to restrict current flow and safeguard the different components. Resistors R4(100 kOhm) and R7(100 kOhm) serve as pull-down resistors for the MOSFETs, ensuring that they stay in the off state while not being actuated by the PWM signal.

The completed AC/AC 2-MOSFET buck-boost converter is presented in Fig. 21. The components were placed and connected with care throughout the soldering process to ensure appropriate electrical connections and reduce the possibility of short circuits or component damage. MOSFETs are on the other sideo of the board.

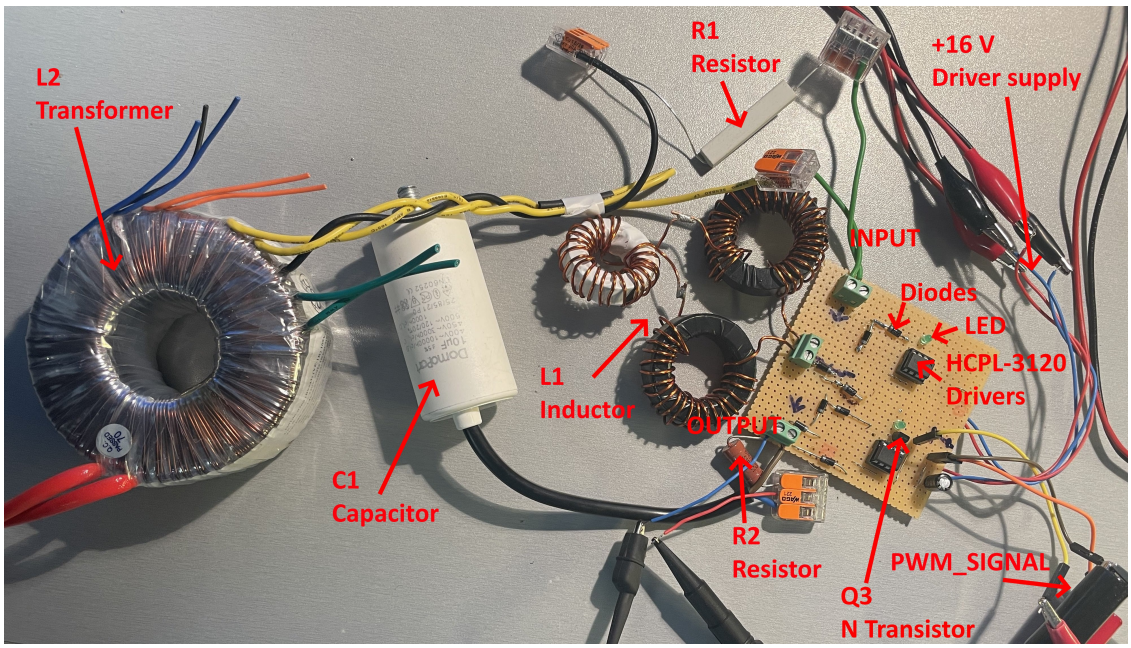

Figure 21: Assembled AC/AC 2-MOSFET buck-boost converter.

The purpose of this experiment is to evaluate the functioning of the proposed AC/AC buck-boost 2-MOSFET converter in real-world conditions. Advanced measuring tools (Tektronix TDS 2024 oscilloscope) were used to examine the input and output waveforms of the constructed converter throughout the testing procedure. The necessary 10 kHz PWM signal was produced using the Tektronix AFG 3021B function generator. The PWM signal was sent to both MOSFETs' control circuits, allowing for accurate switching and converter regulation. The MOSFET Q1 control circuit Fig. 20(a) used the PWM signal directly, and the PWM signal for the MOSFET Q2 control circuit Fig. 20(b) was inverted before being applied to the MOSFET Q2's gate terminal in the Q2 control circuit.

By testing the circuit, its functionality can be verified, and the input/output voltage waveforms can be observed. The input/output voltage waveforms of the completed AC/AC 2-MOSFET buck-boost converter are presented in Fig. 22, 23 and 24 for various duty cycles (neutral mode $D = 0.5$, buck mode $D = 0.3$, and boost mode $D = 0.7$).

From the results, the output voltage waveforms in Fig. 22(b), 23(b) and 24(b), we can conclude that the converter successfully regulates the output voltage, creating a sinusoidal waveform that closely resembles the waveform of the input voltage in Fig. 22(a), 23(a) and 24(a). Small ripples are present (indicating the buck-boost converter's switching nature)

but do not significantly degrade the output waveform quality. The inductor's behavior and energy transfer procedures inside the circuit may be better understood by looking at the inductor voltage waveforms in Fig. 25. In buck-boost converters, inductor voltages are generally represented by the distinctive sawtooth waveforms seen in these waveforms. These unique waveforms are produced by the inductor, which stores energy during the MOSFETs' ON state and releases it during their OFF state.

Input waveform distortion results from harmonic components propagating through the circuit without an input filter. An input filter was not a part of the experimental setup. As a result, several harmonics are present, and there is a low power factor in the measured input voltage after the R1 (180 Ohm) resistor. The low power factor also indicates a larger reactive power component and ineffective input power utilization.

These results underline the importance of including an input filter in real-world applications to reduce harmonics, raise power factor, and increase overall system effectiveness. Although the completed circuit correctly transforms the input voltage and generates the necessary output waveforms, the lack of an input filter and used safety measures produced an inefficient output. An actual application, where power quality and efficiency are crucial, requires more thought-out circuits and better research.

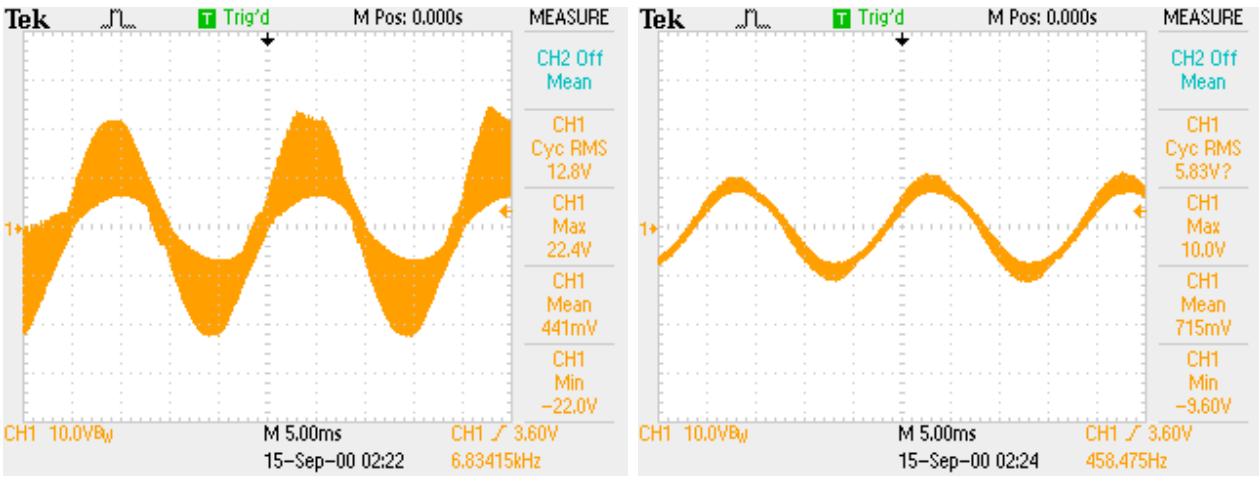

(a) input voltage (b) output voltage

Figure 22: Input/output voltage wave shapes of assembled AC-AC 2-MOSFET buck-boost converter when D=0.5

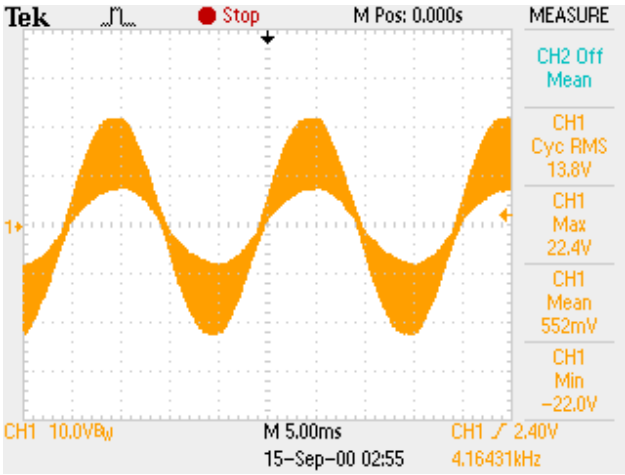

(a) input voltage

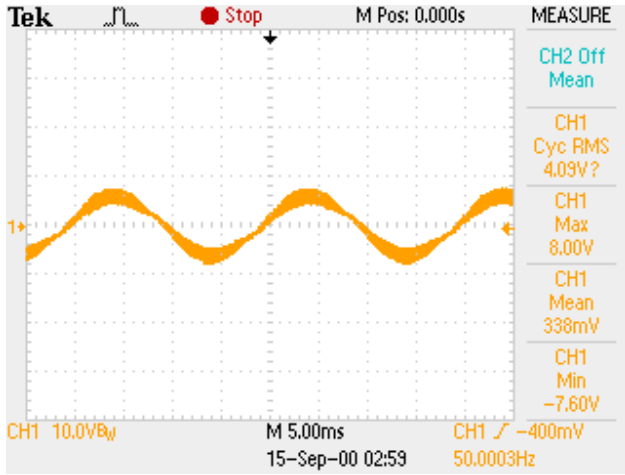

(b) output voltage

Figure 23: Input/output voltage wave shapes of assembled AC-AC 2-MOSFET buck-boost converter when D=0.3

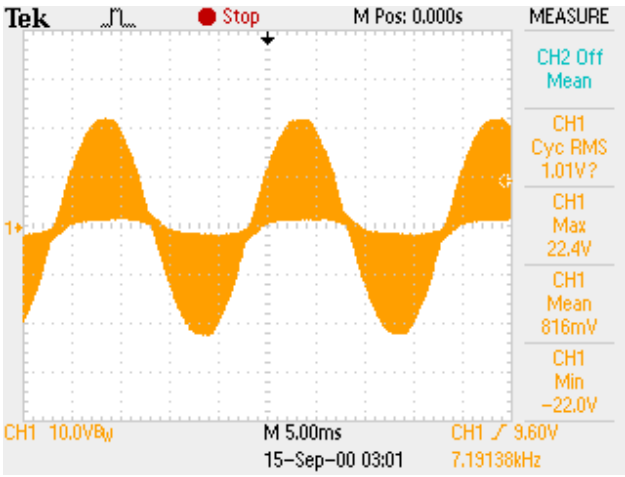

(a) input voltage

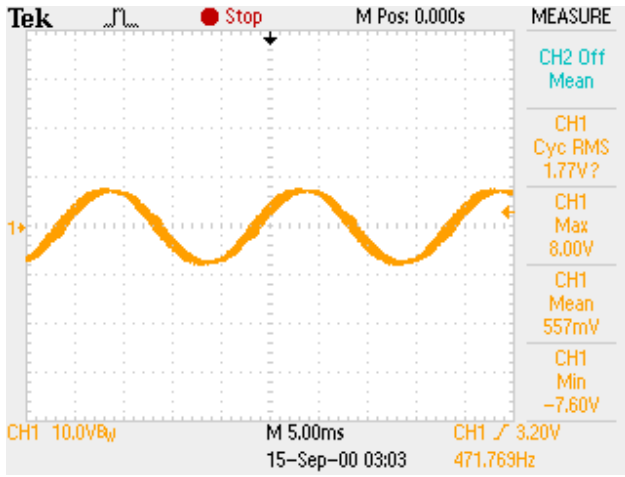

(b) output voltage

Figure 24: Input/output voltage wave shapes of assembled AC-AC 2-MOSFET buck-boost converter when D=0.7

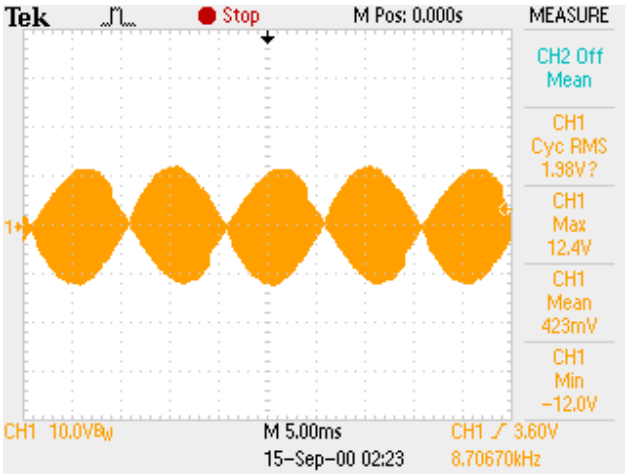

(a) D=0.5

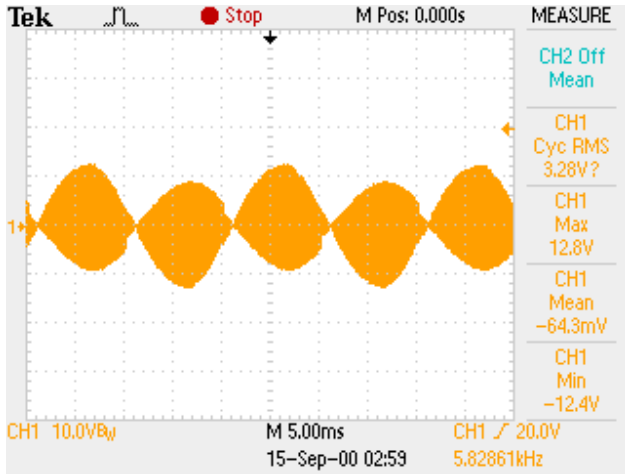

(b) D=0.3

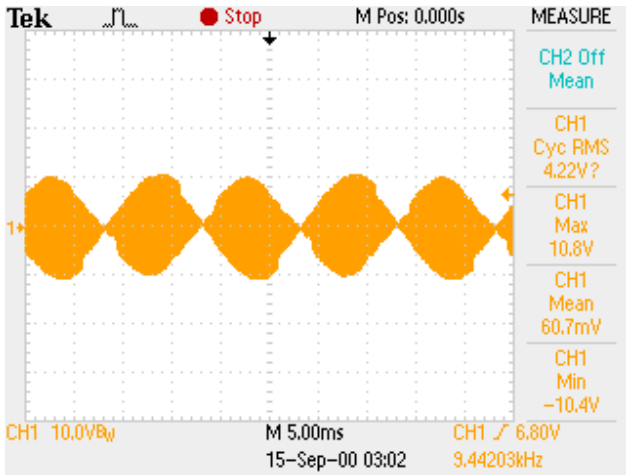

(c) D=0.7

Figure 25: Inductor voltage wave shapes of assembled AC-AC 2-MOSFET buck-boost converter during different duty cycles

CONCLUSIONS AND RECOMMENDATIONS

In conclusion, this master thesis aimed to investigate and explore the development of an AC voltage regulator based on the AC-AC buck-boost converter topology. The research was focused on resolving the drawbacks of current voltage regulation approaches in AC power systems and proposing a solution that may improve efficiency, decrease size, and respond to dynamic operating situations.

The theoretical and methodological sections included an overview of autotransformers, voltage regulation with shifting transformer taps, voltage sags, and dynamic control. Various AC/AC Buck-Boost designs were also addressed, along with their features, showcasing the potential of controlled semiconductor technology for better AC regulation.

The design, modeling, and analysis of the AC voltage regulator based on the AC-AC buck-boost converter were part of the practical portion of the thesis. The effectiveness of the 2-MOSFET regulator and feedback control were assessed using computer simulations. Additionally, a real-world prototype of the AC voltage regulator was built and tested to confirm the theoretical conclusions and show that the suggested method is workable.

Based on the investigation conducted, several conclusions can be drawn:

- First, compared to conventional approaches, the AC-AC buck-boost converter architecture presents a workable method for accomplishing AC voltage control with high efficiency and smaller dimensions. The converter's control strategies enable dynamic management and response to changing circumstances.

- Second, physical prototype testing and computer simulations proved the suggested AC voltage regulators' functionality and efficiency. Regarding voltage regulation, control responsiveness, and output quality assessment, the regulator performed satisfactorily. The modeled AC/AC Buck-Boost converter demonstrated its ability to provide sinusoidal output voltage (bigger or smaller in amplitude than input) and in-phase input current, indicating that the converter successfully regulated the output voltage.

- Third, choosing the proper inductance and capacitance values was essential for maximizing the converter's efficiency. Based on simulation results, the ideal trade-off between performance and usability (for our circumstances and circuit parameters) was found to be a 3uF capacitance and a 5mH inductance.

From the research done and the findings attained, the following recommendations are made for further research and potential applications:

- Additional optimization: Even though the suggested AC voltage regulator produced encouraging results, more improvement is still possible. In order to improve the regulator's effectiveness, responsiveness, and stability, future research could investigate better circuit design and sophisticated control approaches and algorithms.

- Cost Reduction and economic feasibility: To encourage wide adoption, it is critical to resolve costs and assess the proposed AC voltage regulator's economic feasibility. Future studies might concentrate on lowering manufacturing costs, enhancing reliability, and doing an extensive cost-benefit analysis to evaluate the regulator's market viability and competitiveness.

REFERENCES

[1] N. Ashraf, T. Izhar, G. Abbas, V. E. Balas, M. M. Balas, T.-C. Lin, M. U. Asad, U. Farooq, and J. Gu, "A single-phase buck and boost ac-to-ac converter with bipolar voltage gain: Analysis, design, and implementation," *Energies*, vol. 12, no. 7, p. 1376, 2019.

[2] I. Rankis and M. Prieditis, "Properties of the ac/ac buck-boost converter," in *2017 IEEE 58th International Scientific Conference on Power and Electrical Engineering of Riga Technical University (RTUCON)*. IEEE, 2017, pp. 1–6.

[3] P. Szczesniak, "Challenges and design requirements for industrial applications of ac/ac power converters without dc-link," *Energies*, vol. 12, no. 8, p. 1581, 2019.

[4] M. Mansor and N. A. Rahim, "Three-phase pwm-switched autotransformer voltage-sag compensator based on phase angle analysis," *Journal of Power Electronics*, vol. 11, no. 6, pp. 897–903, 2011.

[5] F. Zhu and B. Yang, *Power Transformer Design Practices*. CRC Press, 2021.

[6] J. Faiz and B. Siahkolah, *Electronic tap-changer for distribution transformers*. Springer Science & Business Media, 2011, vol. 2.

[7] H. Zhou, X. Yan, and G. Liu, "A review on voltage control using on-load voltage transformer for the power grid," in *IOP Conference Series: Earth and Environmental Science*, vol. 252, no. 3. IOP Publishing, 2019, p. 032144.

[8] N. Mailah, S. Bashi, and W. Meng, "Microcontroller based semiconductor tap changer for power transformer," in *2003 IEEE Bologna Power Tech Conference Proceedings,*, vol. 4. IEEE, 2003, pp. 6–pp.

[9] S. M. García, J. C. C. Rodríguez, J. A. Jardini, J. V. López, A. I. Segura, and P. M. M. Cid, "Feasibility of electronic tap-changing stabilizers for medium voltage lines—precedents and new configurations," *IEEE transactions on power delivery*, vol. 24, no. 3, pp. 1490–1503, 2009.

[10] Y. Wang, X. Xu, and T. Zhao, "An arcless voltage regulator based on hybrid tap changing topology," in *2018 9th IEEE International Symposium on Power Electronics for Distributed Generation Systems (PEDG)*. IEEE, 2018, pp. 1–4.

[11] M. P. P. ADASUR and D. CHOUGULE, "Power transformer tap switching using semiconductor devices," *JournalNX*, vol. 3, no. 04, pp. 191–195, 2017.

[12] C. Fitzer, M. Barnes, and P. Green, "Voltage sag detection technique for a dynamic voltage restorer," *IEEE Transactions on industry applications*, vol. 40, no. 1, pp. 203–212, 2004.

[13] E. Fuchs, B. Trajanoska, S. Orhouzee, and H. Renner, "Comparison of wavelet and fourier analysis in power quality," in *2012 Electric Power Quality and Supply Reliability.* IEEE, 2012, pp. 1–7.

[14] M. Mansor and N. A. Rahim, "Voltage sag detection-a survey," in *2009 International Conference for Technical Postgraduates (TECHPOS).* IEEE, 2009, pp. 1–6.

[15] M. Heydari, A. Y. Varjani, and M. Mohamadian, "A novel three-phase to three-phase ac/ac converter using six igbts," in *2011 2nd International Conference on Electric Power and Energy Conversion Systems (EPECS).* IEEE, 2011, pp. 1–7.

[16] M. R. T. Hossain, A. H. Abedin, M. Choudhury, and M. N. Uddin, "True three-phase bidirectional switch based ac-ac buck-boost converter topology," in *2013 IEEE Jordan Conference on Applied Electrical Engineering and Computing Technologies (AEECT).* IEEE, 2013, pp. 1–6.

[17] I. Barbi, J. Fagundes, and E. Kassick, "A compact ac/ac voltage regulator based on an ac/ac high frequency flyback converter," in *PESC'91 Record 22nd Annual IEEE Power Electronics Specialists Conference.* IEEE, 1991, pp. 846–852.

[18] J. Hoyo, J. Alcala, and H. Calleja, "A high quality output ac/ac cuk converter," in *2004 IEEE 35th Annual Power Electronics Specialists Conference (IEEE Cat. No. 04CH37551)*, vol. 4. IEEE, 2004, pp. 2888–2893.

[19] J. W. Kolar, T. Friedli, F. Krismer, and S. Round, "The essence of three-phase ac/ac converter systems," in *2008 13th International Power Electronics and Motion Control Conference.* IEEE, 2008, pp. 27–42.