Scavenging of a Two-Stroke Engine

Vytautas Rimša(✉)

Department of Aviation Technologies, Antanas Gustaitis Aviation Institute, Vilnius Gediminas Technical University, Linkmenų g. 28, 08217 Vilnius, Lithuania
vytautas.rimsa@vilniustech.lt

Abstract. Investigation of a two-stroke engine scavenging phenomenon remains a significant issue due to its wide application in sports, the military, and other areas. The finite volume method is used to investigate the two-stroke engine scavenging process. Investigated cold flow study of internal combustion engine is targeting the process of identified and improve fluid flow inside the shaft, ports and muffler. The impact of the engine speed is examined it effect to pressure fluctuations and temperature inside engine, investigated sophisticated blades effect to engine scavenging performance for various blade angles and effect on the required torque.

Keywords: Two stroke · Scavenge · CFX · Cold flow · Blades · Torque

1 Literature Review

Sir Dugal Cherk invented the two-stroke engine at the end of the 19th century. Today, two-stroke engines are still used in motorcycles, scooters and small UAVs due to their simple design and high power-to-mass ratio.

There were attempts to use this engine in automobiles; even more, some quite sophisticated machines, such as the Auto-Union, Saab and others, were produced in the 1960s. However, the two-stroke engine-powered car was banished due to stringent ecological requirements, fuel consumption and exhaust emissions [1].

Analysis of engine fluid flow can be done in many ways one of possible solution it is cold flow analysis given by [2] and [3]. This approach reality "simple" here main focus is on gas flow inside ports and cylinder. The other approach consists of numerical analysis of combustion and transient heat transfers processes in the engine [4, 5]. This approach allowed better understand engine performance, but it require extremely high computation resources there for it is performed only after detail investigation of cold flow engine analysis.

[6] showed the process of charge exchange in a two-stroke opposed-piston aircraft diesel engine. While [7] analyzed the performance of a conventional four-stroke engine operating in the two-stroke cycles by direct fuel injection and mechanical air supercharging. Low temperature combustion (LTC) may be the next step for further emission and fuel consumption reduction. However, LTC requires unconventional ignition systems [4]. A simulation model of a propulsion system in waves is presented with an emphasis on modelling a two-stroke marine diesel engine: the framework for building such a model and its mathematical descriptions [5].

© The Author(s), under exclusive license to Springer Nature Switzerland AG 2023
O. Prentkovskis et al. (Eds.): TRANSBALTICA 2022, LNITI, pp. 782–789, 2023.
https://doi.org/10.1007/978-3-031-25863-3_76

The engine design optimization was proposed by [6]. Where authors analyzed a two-stroke small aero-engine prototype to improve the engine's performance and optimize the geometric parameters of the scavenging ports by performing one-dimensional (1D) and three-dimensional (3D) computational fluid dynamics (CFD) coupling simulations.

The literature review shows that a two-stroke engine's mathematical and physical modelling is still an important and necessary topic. There are many investigations for reality low speed and high volume automobile or motorcycle engines but nevertheless, it lacks comprehensive data on an extremely small volume and high speed engine performance and scavenging analysis.

2 Object of Investigation

A two-stroke engine "Fora" is under investigation in this paper. The engine is regulated according to FAI rules, available at [7]. According to the rules, the engine is restricted by a maximum inlet diameter of Ø4 mm, maximum restricted outlet muffler diameter of Ø6 mm and maximum engine volume of 2.5 cm^3.

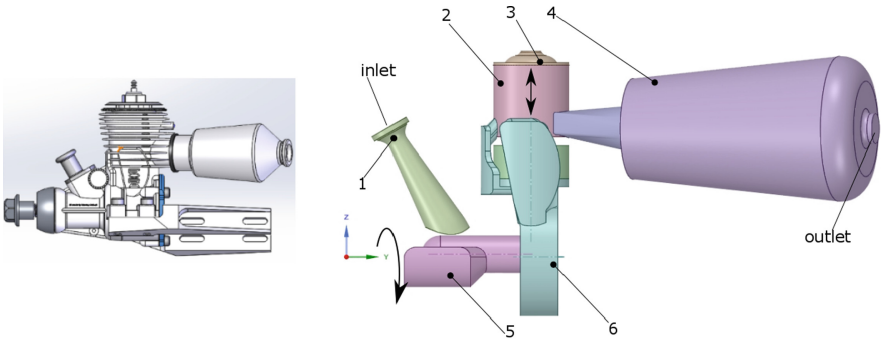

a) b)

Fig. 1. Two-stroke engine "Fora" a) engine general view; d) engine inner solid general elements, where 1 – inlet diffuser; 2 – cylinder with compressible volume in Z-axis respect to time; 3 – head of the cylinder; 4 – muffler; 5 – rotatable shaft in Y-axis; 6 – ports.

2.1 Assumptions and Simplification

The current paper investigates a cold flow engine model with temperature effects due to gas compression/decompression. The shaft body is represented in Fig. 1. The subsequent investigation is carried out: 1. Body 5 rotates around the Y-axis; the rotation speed is 28,000 rpm which is the typical actual engine speed on the ground when the speed of an aircraft zero. 2. The rotation speed of 30,000 rpm is related to the engine speed in the loop, and 3 the rotation speed is 35,000 rpm when the engine exceeds maximum speed when the aircraft flies in the horizontal direction. The cylinder gas in Fig. 1 (body 2)

deforms respectively to the time in the Z-axis direction, simulating piston motion. The numerical model is constrained, so the air that forms the inlet is sucked into a diffuser. At the appropriate time, the air flows into the shaft (body 5) and later through the crankcase ports (body 6). At the appropriate time, it flows into the cylinder (body 2) and then via muffler (body 4) flows to the environment through the outlet.

In this paper, the effect of engine speed on engine head temperature Fig. 1 (body 2) and speed on the outflow of gas from the muffler was analyzed (body 4). It helped to partly validate the numerical model, the validation of which is quite complicated due to its high complicity. In the end, the improvements to a two-stroke engine scavenging process are proposed.

2.2 Mesh

Two types of tetrahedral mesh were created: a 10-node mesh for complicated geometry and hexagonal mesh for simplified geometry. The mesh consisted of 148 k nodes and 434 k elements, the quality of mesh parameter skewness is 0.75, while the maximum value is up to 0.95.

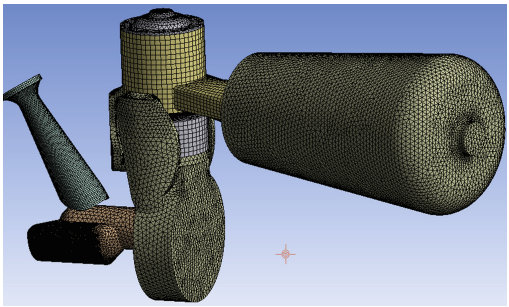

Fig. 2. Engine inner structure mesh.

3 Calculation Results

Due to high complexity, the numerical investigation of a two-stroke engine scavenging process is still a challenging case requiring great computer resources. The acceptable time step was identified. It could be represented as one shaft rotation cycle is equal to 360° degrees or 100 time steps are equal to 3.6°. The current paper investigated two-engine rotations. The first is some specific additional initialization, while the second rotation was measured concerning such output parameters as temperature versus engine speed. It is reflected in Fig. 3. It is seen that with an increase in engine speed, the temperature of an engine drops down. While on the measured surface, the increase in the engine's speed by 20% decreases the engine's temperature by 4%, which is logical as higher speed increases the mass of airflow and causes the decrease in the surface temperature.

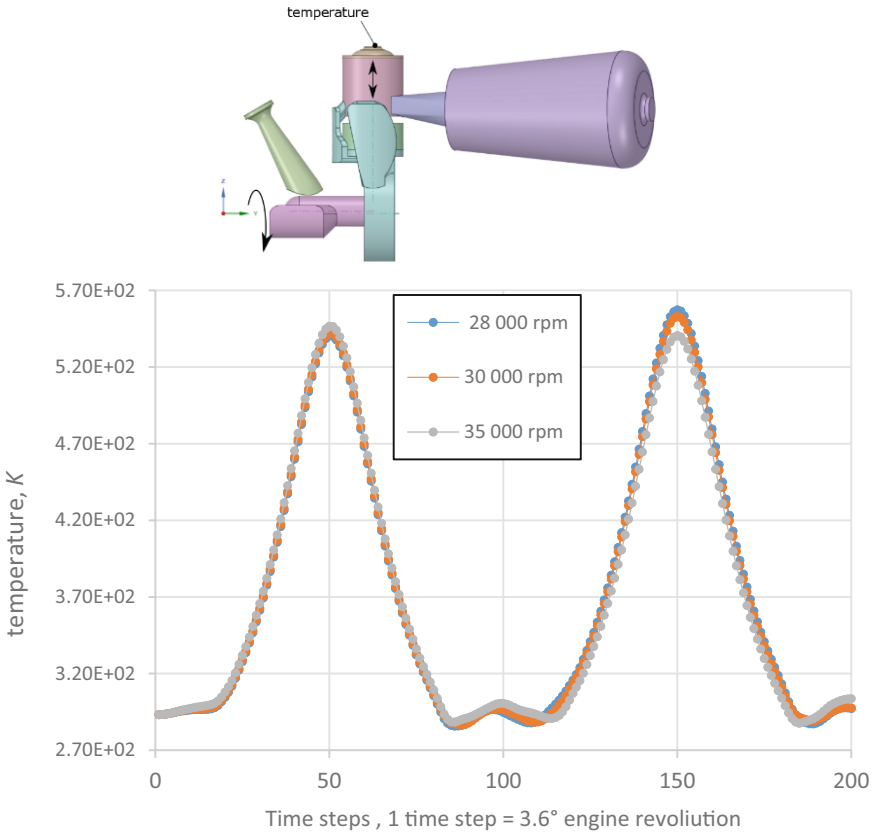

Fig. 3. Engine head temperature versus engine speed.

While Fig. 3 shows pressure in the outlet surface respectfully to the engine speed in this case, pressure fluctuations are much higher than the temperature numbers in Fig. 4. It was affected by high gas compressibility. Similar results are given in Gordon Blair's [11] where the author says that in the *P/Pa* ratio, the It was affected by high gas compressibility 0.75 and the highest value exceeds up to 1.4. The numerical CFD model simulation shows maximum value *P/Pa* = 1.4 at 35,000 rpm and minimum *P/Pa* = 0.687 at 35,000 rpm.

3.1 Investigation of Additional Blades' Effect on Two-Stroke Engine Scavenging Process

One of possible way to increase engine performance is to suck more air inside engine, burn it with more fuel in the cylinder and later push burn out gas for next stroke.

For many years of physical experiments engineers found appropriate timing settings for two stroke engine design.

The new search of increase of engine power is to investigate effectivity of the engine gas flow with added additional "blades" is shown in Fig. 5, and the effect of the blade

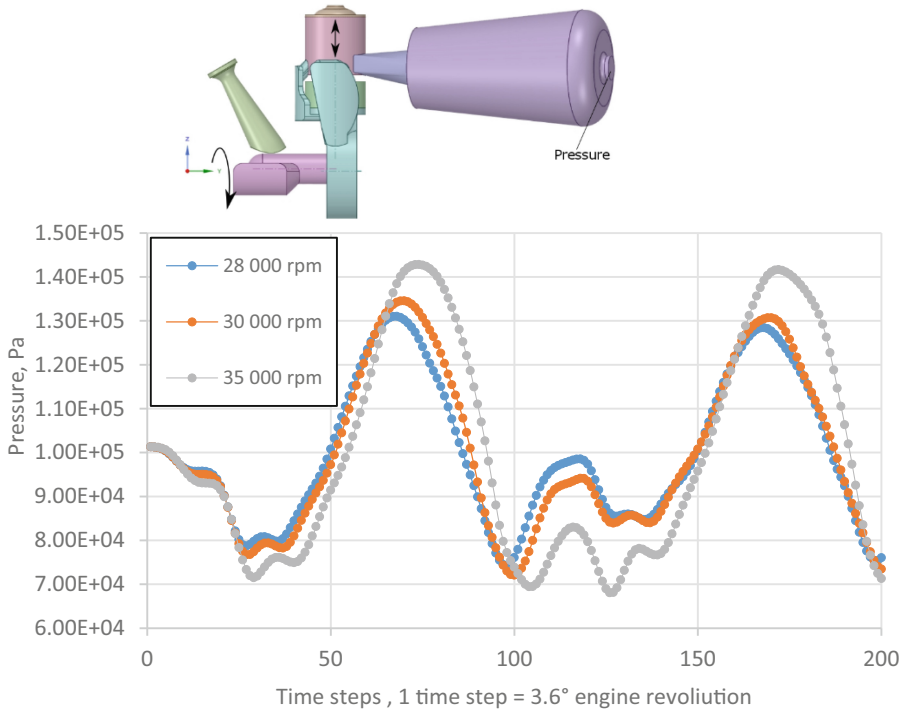

Fig. 4. Engine outlet pressure versus engine speed.

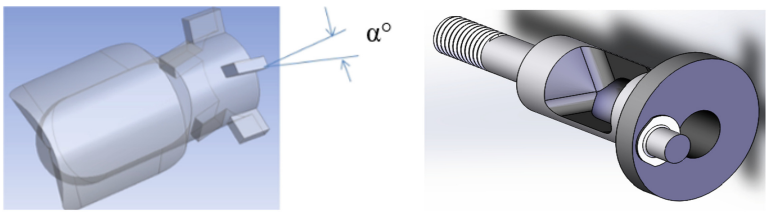

a) b)

Fig. 5. Typical two strike shaft (a); inner volume of shaft with added additional blades (b).

angle $\alpha°$ on the engine scavenging process is investigated. The basic idea of investigation is to calculate contribution of blade elements to engine scavenging process if it helps to suck more air during one engine stroke, and also investigate negative effect –increase require torque to rotate the shaft. Addition these blades during engine rotation additional mix air and fuel mixture also helps to vaporize and prepare the mixture for combustion.

Calculation results (Fig. 6 and Fig. 7) show that small blades angle α below 60° and less are not able to help to suck more air due to reality small angle of attack. It means that require to analyze smaller angle step α between 70° up to 90° also capture all operating engine speed regimes.

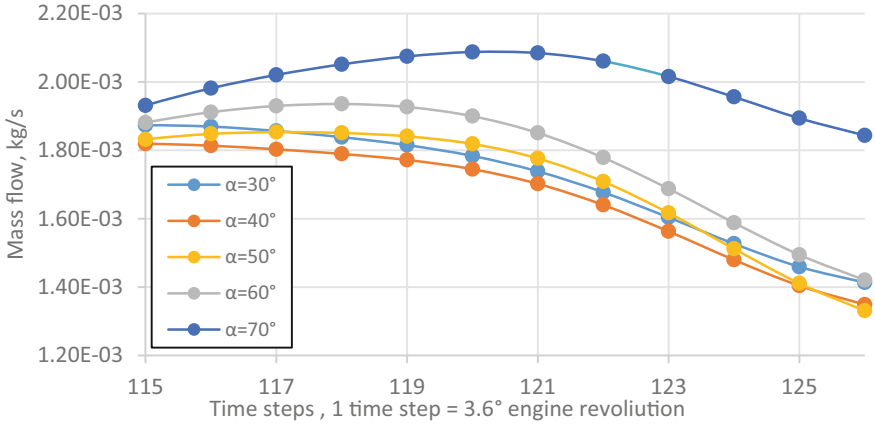

Fig. 6. Air flow debit in the opening position to blade angle.

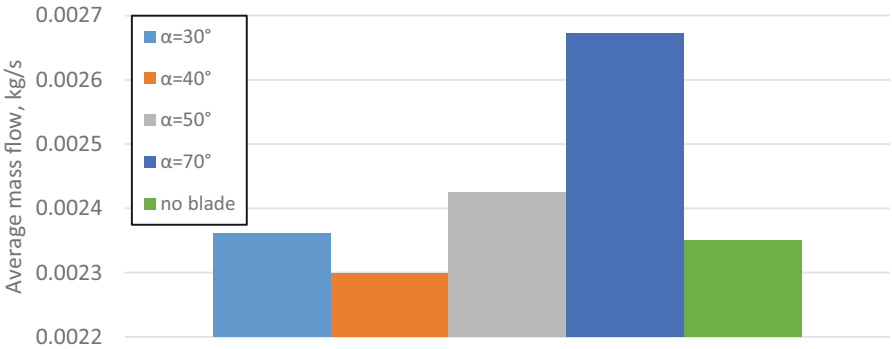

Fig. 7. Average airflow debit to blade angle inflow into engine inlet.

Computational analysis of a detail showed that additional blades added to the engine shaft work positively as they increase the inlet airflow velocity and mass by approximately 11% when the blade angle is 80° (Fig. 6 and Fig. 7). However, it also has drawbacks: added blades require more torque to rotate the shaft, increasing the value by 33% (Fig. 8) compare with shaft without blades. While these type of engine generating power exceed up to 0.8 – 0.95 kW. Therefore, this increase of require torque reality small compare with positive outcome and could be neglected.

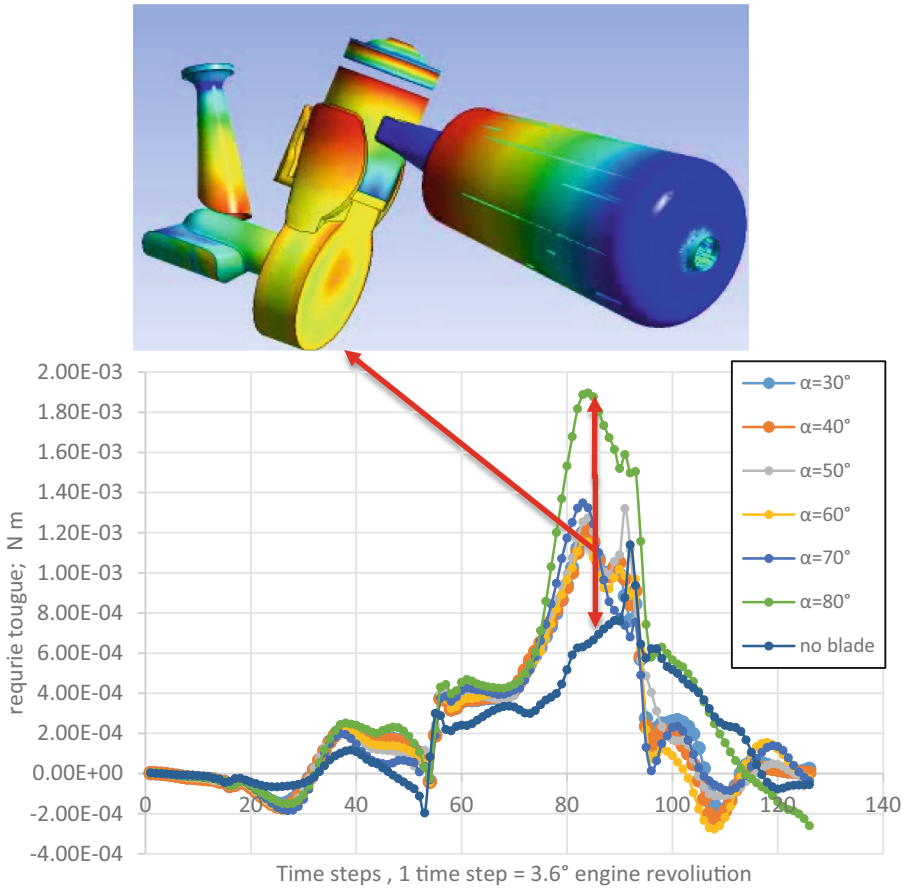

Fig. 8. Required momentum to rotate the shaft with respect to blade angle. Required momentum increased by 33%, and the maximum peak at the opposite side of the intake.

4 Conclusions

Numerical investigation of a two-stroke engine "Fora" shows similar results with [7] numerical error exceeding 6%. It indicates that this investigated engine with low volume and reality high speed compare with more traditional motorcycles engines are affected by similar scavenging process by use cold flow simulation approach. One of possible engine power increase opportunities is additional added blade elements positively contribute to the engine scavenging process, and the physical model could validate it. Due to high gas flow velocities inside engine the blade angle α must be quite big more than 70°… 80°. Physical testing of high complicity of investigation object is quite difficult to measure contribution of new added element to whole engine performance due to it CFD tool give useful role to investigation and optimization engine performance.

References

1. Tsai, J.S.: Characteristics of emissions from a portable two-stroke gasoline engine. Aerosol Air Qual. Res. (2020). https://doi.org/10.4209/aaqr.2019.12.0650
2. Pathak, Y.R., Deore, K.D., Patil, V.M.: In cylinder cold flow CFD simulation of IC engine using hybrid approach. Int. J. Renew Energy Technol. **3**(8), 16e21 (2014)
3. Kurniawan, W.H., Abdullah, S., Shamsudeen, A.: A computational fluid dynamics study of cold-flow analysis for mixture preparation in a motored four-stroke direct injection engine. J. Appl. Sci. **7**(19), 2710e24 (2007)
4. Illa´n, F., Alarco´n, M.: Numerical analysis of combustion and transient heat transfer processes in a two-stroke SI engine. Appl. Therm. Eng. **30**(16), 2469e75 (2010)
5. Varol, Y., Oztop, H.F., Firat, M., Koca, A.: CFD modeling of heat transfer and fluid flow inside a pent-roof type combustion chamber using dynamic model. Int. Commun. Heat Mass Transf. **37**(9), 1366e75 (2010)
6. Grabowski, K., Pietrykowski, and Karpiński, P.: The zero-dimensional model of the scavenging process in the opposed-piston two-stroke aircraft diesel engine. Propulsion Power Res. (2019). https://doi.org/10.1016/j.jppr.2019.11.003
7. Herrmann, S., Nora, M.D., Lanzanova, T.D.M.: Development of a two-stroke cycle engine for use in the agricultural aviation sector. J. Aerosp. Technol. Manag. (2020). https://doi.org/10.5028/jatm.cab.1155
8. Ciampolini, M., Bigalli, S., Balduzzi, F., Bianchini, A., Romani, L., Ferrara, G.: CFD analysis of the fuel-air mixture formation process in passive prechambers for use in a high- pressure direct injection (HPDI) two-stroke engine. Energies (2020). https://doi.org/10.3390/en13112846
9. Yum, Kevin Koosup, Bhushan Taskar, Eilif Pedersen, and Sverre Steen: "Simulation of a Two-Stroke Diesel Engine for Propulsion in Waves." International Journal of Naval Architecture and Ocean Engineering. (2017). https://doi.org/10.1016/j.ijnaoe.2016.08.004
10. Qiao, Y., Duan, X., Huang, K., Song, Y., Qian, J.: Scavenging ports' optimal design of a two-stroke small aeroengine based on the Benson/Bradham model. Energies (2018). https://doi.org/10.3390/en11102739
11. Gordon, P.: Blair Design and Simulation of Two-Stroke Engines SAE International, p. 647 (February 1 1996) ISBN-13: 978–1560916857
12. Retrieved May 22, 2022 http://www.f2d.dk/rules/f2d-rules-2018.htm